SECTION 2700
STANDARD DETAILS FOR LANDSCAPING

DWG. NO.	TITLE
2701	MASTERVALVE W/RPBA
2701-A	BERMAD FLOWMETER MASTERVALVE W/RPBA
2702	MASTERVALVE W/PVB
2702-A	BERMAD FLOWMETER MASTERVALVE W/PVB
2702-B	IRRIGATION SYSTEMS
2702-C	IRRIGATION SYSTEMS WITH CHEMICAL INJECTION
2703	IRRIGATION ELECTRIC VALVE
2704	IRRIGATION THRUST BLOCKS
2705	AIR RELIEF VALVE
2706	IRRIGATION GATE VALVE
2707	IRRIGATION MAINLINE ISOLATION VALVE
2708	QUICKS COUPLER VALVE
2709	SPRINKLER HEAD W/FLEX PIPE ASSEMBLY
2709-A	IRRIGATION DRIPS VALVE
2709-B	DRINKING FOUNDATION W/BALL DRAIN
2710	IRRIGATION BUBBLER HEAD AT TREE
2711	IRRIGATION BUBBLER HEAD AT SHRUB
2711-A	BUBBLER DETAIL IN FLOWER BED
2712	IRRIGATION BUBBLER HEAD IN TREE GRATE
2713	TREE PLANTED IN TURF
2714	ISOLATED TREE PLANTING
2715	TREE IN PLANTER
2716	TREE PLANTED ON A SLOPE
2717	ISOLATED SHRUB PLANTING
2718	SHRUB BED
2719	FLOWER BED
2720	CONCRETE WALK
2721	CRUSHED SAND PATH W/CONCRETE MOWSTRIP
2722	ASPHALT PATH W/CONCRETE MOWSTRIP
2723	BOLLARD DETAIL
2724	BOLLARD IN CONCRETE WALKS
2725	CONCRETE EDGER AT FENCE
2726	CONCRETE MOWSTRIPS
2727	CONCRETE EDGER AT TREE WELL OR PLANTER
2728	TURN DOWN SLAB AT PLAN AREA
2729	EDGER WALL AT SAND PLAY AREA
2730	MEDIAN PLANTER W/ROADBED WATERPROOFING

(Revised 12/92, Update No. 4)

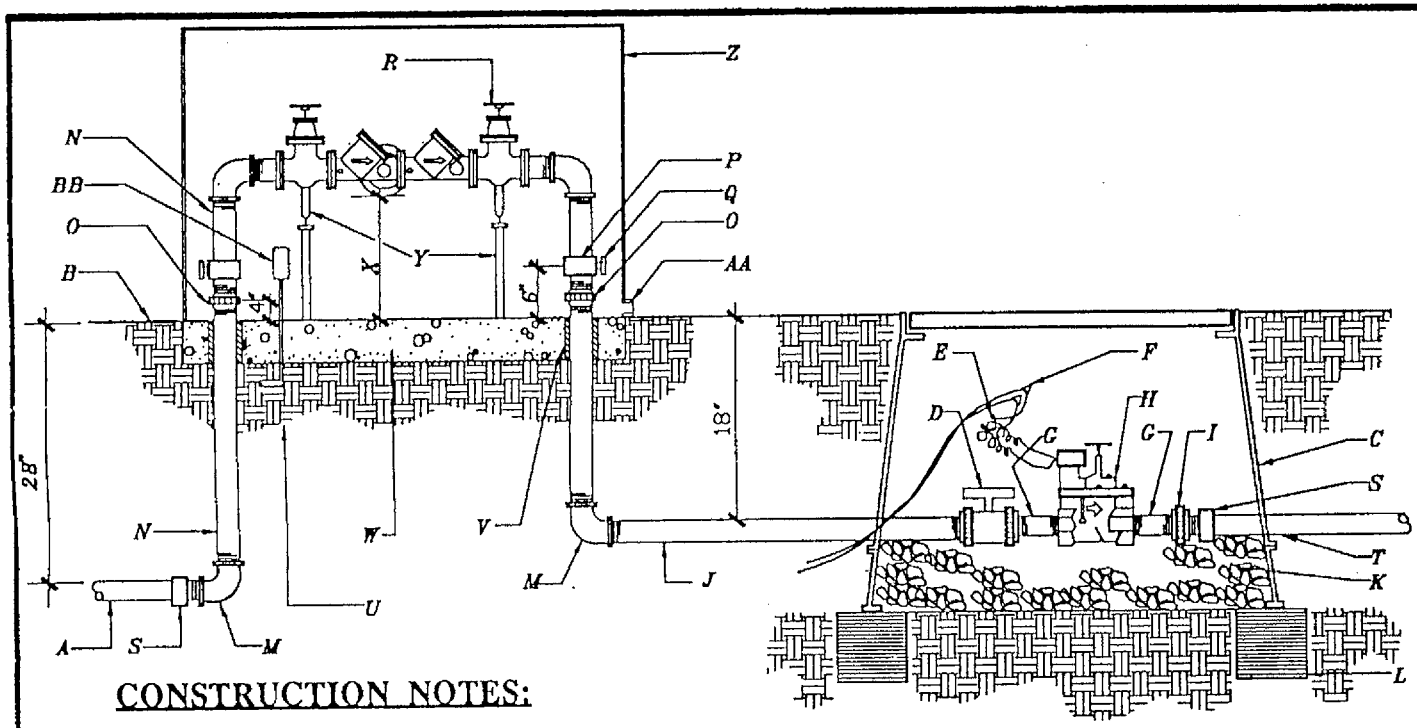

GENERAL NOTES:

1. HORIZONTAL RPBA INSTALLATION REQ'D..
2. ABOVE GRADE RPBA INSTALLATION REQ'D..
3. WATER LINE PRESSURE AND TEMP. MUST NOT EXCEED RATED CAPACITY OF RPBA.
4. PROTECT FROM FREEZING WITH POSITIVE HEAT SOURCE AND INSULATION.
5. MIN. RPBA SIZE MUST BE THE BLDG. SERVICE LINE SIZE.
6. DO NOT INSTALL IN FLOOD PRONE AREAS.
7. INSTALL WATER HAMMER ARRESTORS & THERMO EXPANSION PROTECTION AS NECESSARY.
8. METALLIC RISER PIPING REQ'D.
9. JOINTS TO BE ADEQUATELY RESTRAINED.
10. DEVIATION FROM THESE SPECIFICATIONS MUST HAVE PRIOR WRITTEN APPROVAL FROM THE ADMINISTRATIVE AUTHORITY.
11. CONCRETE MOW STRIP SHALL BE INSTALLED AROUND THE ENTIRE PERIMETER OF THE MASTERVALVE AND RPBA ASSEMBLY. MOWSTRIP SHALL BE A MIN OF 12" FROM PIPING AND VALVE BOX. (OPTIONAL, DEPENDING ON APPLICATION).

CONSTRUCTION NOTES:

A. SERVICE LINE TO WATER METER, NO OUTLETS ALLOWED.
B. FINISH GRADE, MATERIAL VARIES REFERENCE PLANS.
C. BROOK PRODUCTS INC., 1730 PB-18 BODY (ABS) VALVE BOX W/ BOLT DOWN COVER (ABS) AND ONE 8" EXTENSION.
D. SPEARS TRUE UNION SCHEDULE 80 PVC BALL VALVE.
E. 24" WIRE EXPANSION COIL.
F. 3M SKOTCH LOK.
G. SCHEDULE 80 PVC 4" NIPPLE.
H. ELECTRIC VALVE (REFERENCE DRAWINGS FOR SIZE).
I. SPEARS SCHEDULE 80 PVC UNION.
J. SCHEDULE 80 PVC NIPPLE 3' MIN..
K. 1" DIAMETER WASHED ROCK.
L. 8"X8"X16" SOLID CMU BLOCK.
M. GALVANIZED ELL.
N. GALVANIZED NIPPLE.
O. GALVANIZED UNION (MIN. 4" ABOVE GRADE).
P. GALVANIZED TEE.
Q. BALL DRAIN, CHAMPION DV050 1/2".
R. RPBA BACKFLOW PREVENTER (REFERENCE DRAWINGS).
S. PVC MIP ADAPTER.
T. NON-CONSTANT PRESSURE IRRIGATION MAINLINE.
U. COMPACTED SUBGRADE.
V. ADEQUATE SLEEVING & INSULATION (MIN. 1" THICK).
W. MIN. 4" CONCRETE SLAB.
X. 30" MAX., 12" MIN. (FROM LOWEST POINT OF ASSEMBLY TO TOP OF SLAB).
Y. PROVIDE METALLIC OR REINF. CONCRETE SUPPORTS ON UNITS GREATER THAN 2".
Z. PROTECTIVE ENCLOSURE, SEE CITY STANDARD DWG. 2389 FOR CRITERIA.
AA. DRAIN, SIZE TO HANDLE FULL DISCHARGE OF RELIEF VALVE.
BB. ELECTRIC OUTLET FOR HEATED PROTECTIVE ENCLOSURE.

REVISIONS
12/91
12/92

CITY OF ALBUQUERQUE

LANDSCAPE
MASTERVALVE W/ RPBA
DWG. 2701

NOV. 1990

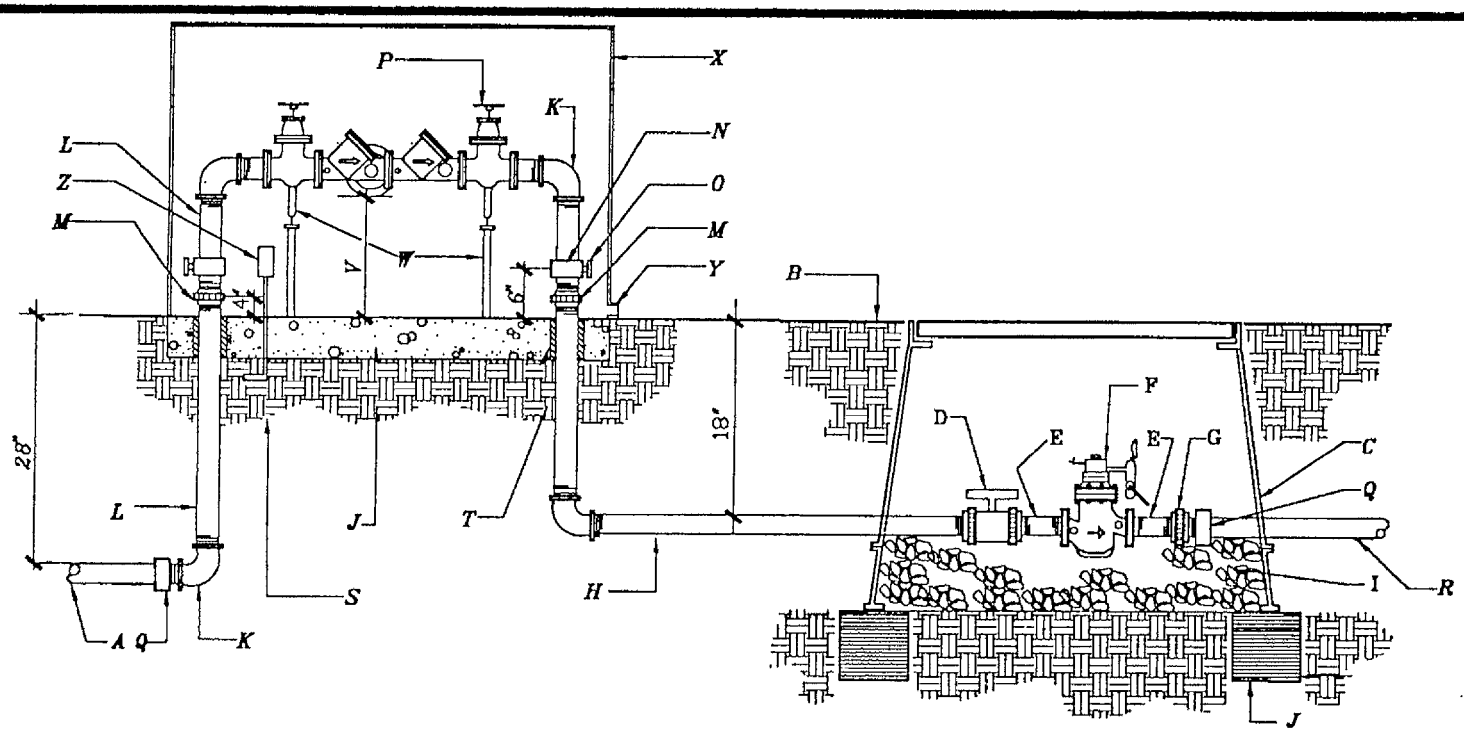

GENERAL NOTES:

1. HORIZONTAL RPBA INSTALLATION REQ'D..
2. ABOVE GRADE RPBA INSTALLATION REQ'D..
3. WATER LINE PRESSURE AND TEMP. MUST NOT EXCEED RATED CAPACITY OF RPBA.
4. PROTECT FROM FREEZING WITH POSITIVE HEAT SOURCE AND INSULATION.
5. MIN. RPBA SIZE MUST BE THE BLDG. SERVICE LINE SIZE.
6. DO NOT INSTALL IN FLOOD PRONE AREAS.
7. INSTALL WATER HAMMER ARRESTORS & THERMO EXPANSION PROTECTION AS NECESSARY.
8. METALLIC RISER PIPING REQ'D.
9. JOINTS TO BE ADEQUATELY RESTRAINED.
10. DEVIATION FROM THESE SPECIFICATIONS MUST HAVE PRIOR WRITTEN APPROVAL FROM THE ADMINISTRATIVE AUTHORITY.
11. CONCRETE MOW STRIP SHALL BE INSTALLED AROUND THE ENTIRE PERIMETER OF THE MASTERVALVE AND RPBA ASSEMBLY. MOWSTRIP SHALL BE A MIN OF 12" FROM PIPING AND VALVE BOX. (OPTIONAL, DEPENDING ON APPLICATION).

CONSTRUCTION NOTES:

A. SERVICE LINE TO WATER METER, NO OUTLETS ALLOWED.
B. FINISH GRADE, MATERIAL VARIES REFERENCE PLANS.
C. BROOK PRODUCTS INC., 1730 PB-18 BODY (ABS) VALVE BOX W/ BOLT DOWN COVER (ABS) AND ONE 8" EXTENSION.
D. SPEARS TRUE UNION SCHEDULE 80 PVC BALL VALVE.
E. SCHEDULE 80 PVC 4" NIPPLE.
F. BERMAD FLOWMETER. REFERENCE IRRIGATION LEGEND FOR SIZE.
G. SPEARS SCHEDULE 80 PVC UNION.
H. SCHEDULE 80 PVC NIPPLE 3' MIN..
I. 1" DIAMETER WASHED ROCK.
J. 8"X8"X16" SOLID CMU BLOCK.
K. GALVANIZED ELL.
L. GALVANIZED NIPPLE.
M. GALVANIZED UNION (MIN. 4" ABOVE GRADE).
N. GALVANIZED TEE.
O. BALL DRAIN, CHAMPION DV050 1/2".
P. RPBA BACKFLOW PREVENTER (REFERENCE DRAWINGS).
Q. PVC MIP ADAPTER.
R. NON-CONSTANT PRESSURE IRRIGATION MAINLINE.
S. COMPACTED SUBGRADE.

REVISIONS	CITY OF ALBUQUERQUE
12/92	LANDSCAPE BERMAD FLOWMETER MASTERVALVE W/ RPBA DWG. 2701-A NOV. 1990

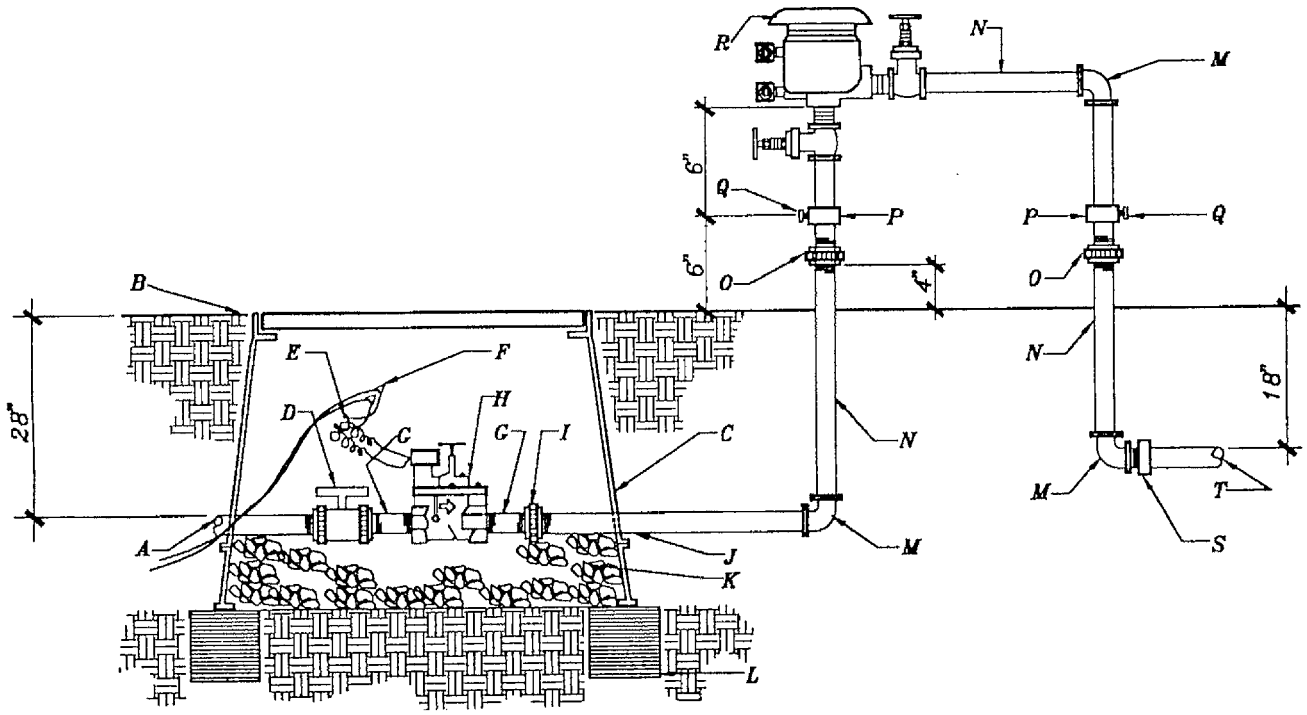

GENERAL NOTES:

1. PVB'S ARE UNAPPROVED FOR CONTAINMENT PROTECTION, EXCEPT FOR LAWN IRRIGATION SYSTEM.
2. DO NOT INSTALL IN FLOOD PRONE AREAS.
3. DO NOT INSTALL PVB'S MORE THAN 5' ABOVE GROUND LEVEL. PVB'S MUST BE 12" MIN. ABOVE HIGHEST POINT OF ALL DOWNSTREAM PIPING AND OUTLETS.
4. PROTECT PVB'S FROM FREEZING W/ POSITIVE HEAT ELEMENT. (OTHER MEANS MAY BE USED WITH PRIOR APPROVAL BY ADMINISTRATIVE AUTHORITY).
5. HORIZONTAL PVB INSTALLATION REQUIRED. (POSITIONED AS SHOWN).
6. JOINTS TO BE ADEQUATELY RESTRAINED.
7. METALLIC RISER PIPING REQUIRED.
8. INSTALL A 8"X8"X16" SOLID CMU BLOCK AT EACH CORNER OF THE VALVE BOX.
9. WASH ROCK SHALL BE INSTALLED FLUSH WITH BOTTOM OF PIPE.
10. CONCRETE MOWSTRIP SHALL BE INSTALLED AROUND THE ENTIRE PERIMETER OF THE MASTERVALVE AND PVB ASSEMBLY. MOWSTRIP SHALL BE A MIN. OF 12" FROM PIPING AND VALVE BOX. (OPTIONAL, DEPENDING ON APPLICATION).

CONSTRUCTION NOTES:

A. SERVICE LINE TO WATER METER, NO OUTLETS ALLOWED.
B. FINISH GRADE, MATERIAL VARIES REFERENCE PLANS.
C. BROOK PRODUCTS INC., 1730 PB-18 BODY (ABS) VALVE BOX W/ BOLT DOWN COVER (ABS) AND ONE 8" EXTENSION.
D. SPEARS TRUE UNION SCHEDULE 80 PVC BALL VALVE.
E. 24" WIRE EXPANSION COIL.
F. 3M SKOTCH LOK.
G. SCHEDULE 80 PVC 4" NIPPLE.
H. ELECTRIC VALVE (REFERENCE DRAWINGS FOR SIZE).
I. SPEARS SCHEDULE 80 PVC UNION.
J. SCHEDULE 80 PVC NIPPLE 3' MIN..
K. 1" DIAMETER WASHED ROCK.
L. 8"X8"X16" SOLID CMU BLOCK.
M. GALVANIZED ELL.
N. GALVANIZED NIPPLE.
O. GALVANIZED UNION (MIN. 4" ABOVE GRADE).
P. GALVANIZED TEE.
Q. BALL DRAIN, CHAMPION DV050 1/2".
R. PVB BACKFLOW PREVENTER (REFERENCE DRAWINGS).
S. PVC MIP ADAPTER.
T. NON-CONSTANT PRESSURE IRRIGATION MAINLINE.

CITY OF ALBUQUERQUE

REVISIONS
12/91
3/92
12/92

LANDSCAPE
MASTERVALVE W/ PVB
DWG. 2702 JAN. 1991

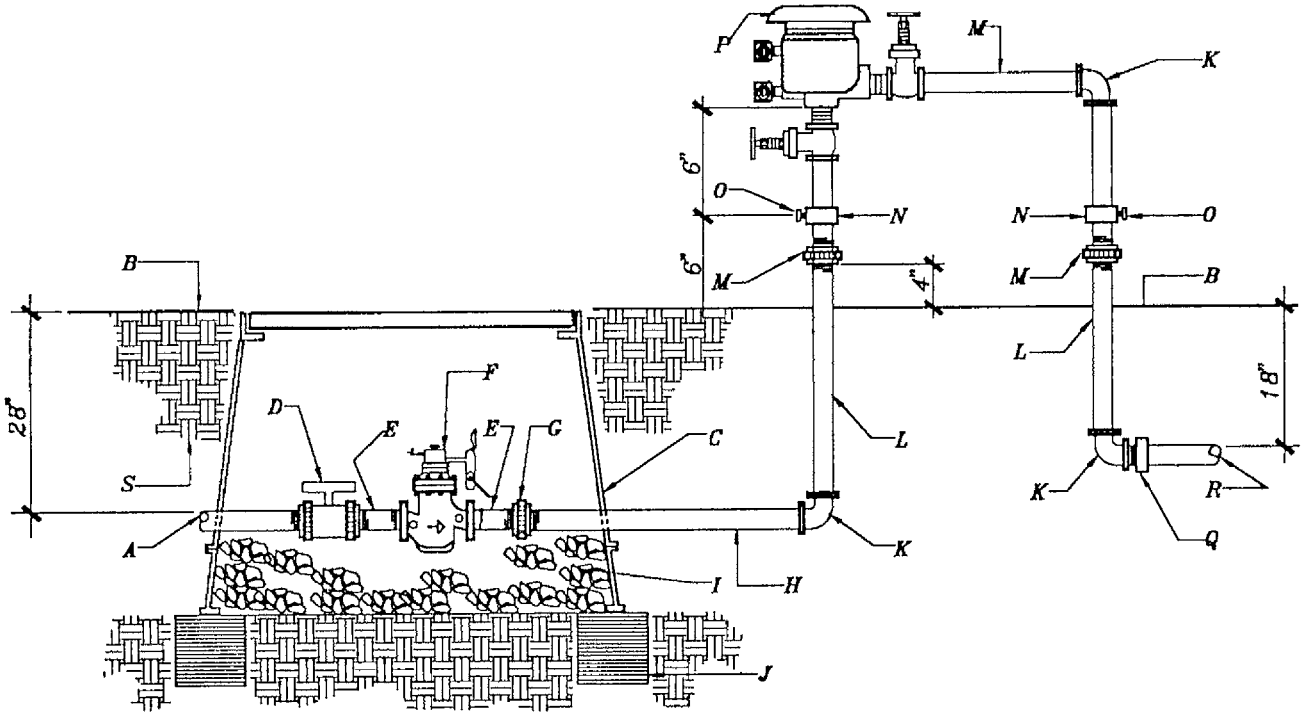

GENERAL NOTES:

1. PVB'S ARE UNAPPROVED FOR CONTAINMENT PROTECTION, EXCEPT FOR LAWN IRRIGATION SYSTEM.
2. DO NOT INSTALL IN FLOOD PRONE AREAS.
3. DO NOT INSTALL PVB'S MORE THAN 5' ABOVE GROUND LEVEL. PVB'S MUST BE 12" MIN. ABOVE HIGHEST POINT OF ALL DOWNSTREAM PIPING A OUTLETS.
4. PROTECT PVB'S FROM FREEZING W/ POSITIVE HEAT ELEMENT. (OTHER MEANS MAY BE USED WITH PRIOR APPROVAL BY ADMINISTRATIVE AUTHORITY).
5. HORIZONTAL PVB INSTALLATION REQUIRED. (POSITIONED AS SHOWN).
6. JOINTS TO BE ADEQUATELY RESTRAINED.
7. METALLIC RISER PIPING REQUIRED.
8. INSTALL A 8"X8"X16" SOLID CMU BLOCK AT EACH CORNER OF THE VALVE BOX.
9. WASH ROCK SHALL BE INSTALLED FLUSH WITH BOTTOM OF PIPE.
10. CONCRETE MOWSTRIP SHALL BE INSTALLED AROUND THE ENTIRE PERIMETER OF THE MASTERVALVE AND PVB ASSEMBLY. MOWSTRIP SHALL BE A MIN. OF 12" FROM PIPING AND VALVE BOX. (OPTIONAL, DEPENDING ON APPLICATION).

CONSTRUCTION NOTES:

A. SERVICE LINE TO WATER METER, NO OUTLETS ALLOWED.
B. FINISH GRADE, MATERIAL VARIES REFERENCE PLANS.
C. BROOK PRODUCTS INC., 1730 PB-18 BODY (ABS) VALVE BOX W/ BOLT DOWN COVER (ABS) AND ONE 8" EXTENSION.
D. SPEARS TRUE UNION SCHEDULE 80 PVC BALL VALVE.
E. SCHEDULE 80 PVC 4" NIPPLE.
F. BERMAD FLOWMETER. REFERENCE IRRIGATION LEGEND FOR SIZE.
G. SPEARS SCHEDULE 80 PVC UNION.
H. SCHEDULE 80 PVC NIPPLE 3' MIN..
I. 1" DIAMETER WASHED ROCK.
J. 8"X8"X16" SOLID CMU BLOCK.
K. GALVANIZED ELL.
L. GALVANIZED NIPPLE.
M. GALVANIZED UNION (MIN. 4" ABOVE GRADE).
N. GALVANIZED TEE.
O. BALL DRAIN, CHAMPION DV050 1/2".
P. PVB BACKFLOW PREVENTER (REFERENCE DRAWINGS).
Q. PVC MIP ADAPTER.
R. NON-CONSTANT PRESSURE IRRIGATION MAINLINE.
S. COMPACTED SUBGRADE.

	CITY OF ALBUQUERQUE
REVISIONS	LANDSCAPE
12/92	BERMAD FLOWMETER
	MASTERVALVE W/ PVB
	DWG. 2702-A JAN.1991

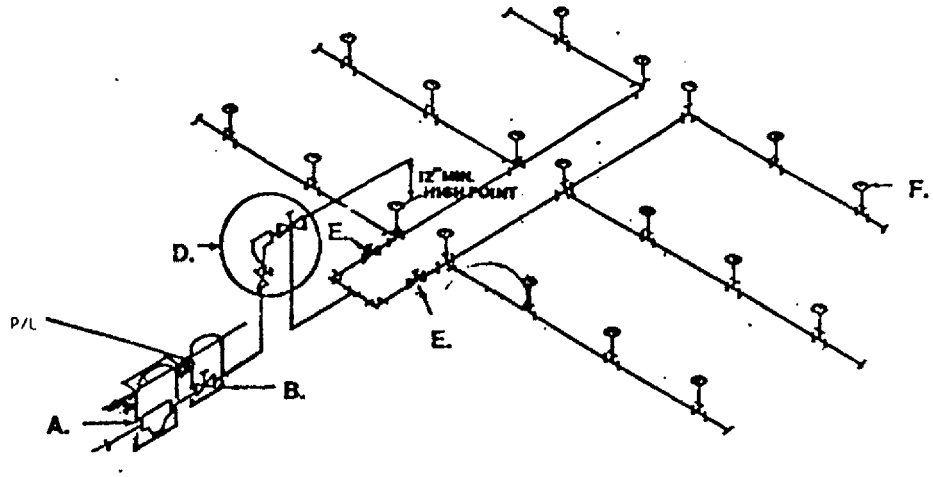

W/ PRESSURE VACUUM BREAKER
EXAMPLE 1

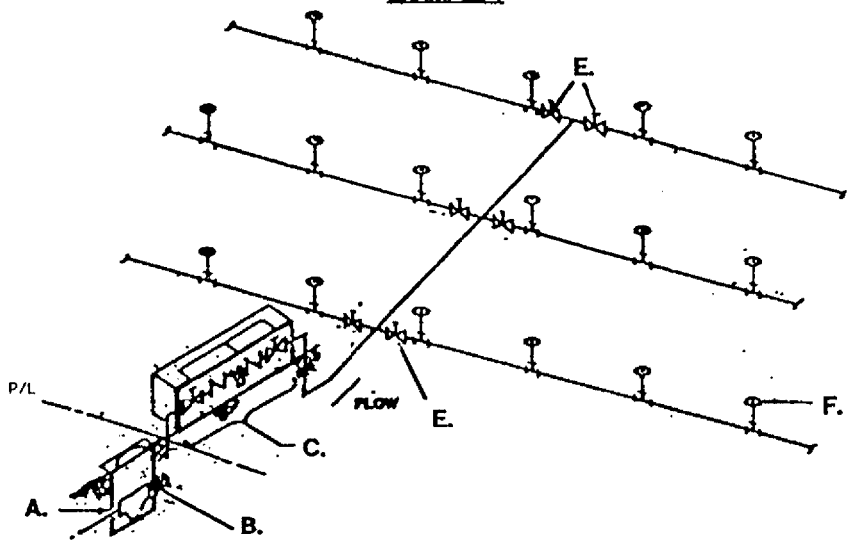

REDUCED PRESSURE PRINCIPLE BACKFLOW PREVENTION ASSEMBLY
EXAMPLE 2

GENERAL NOTES

1. See Landscape DWGS 2701, 2702,2702-B, 2703-2712 and Water DWG 2385.

CONSTRUCTION NOTES

A. Meter
B. Valve (electric or manual) (Reference Drawing)
C. Approved Reduced Pressure Backflow Assembly (RPBA)
D. Approved pressure vacuum breaker (PVB)
E. Control valve
F. Sprinkler

REVISIONS	CITY OF ALBUQUERQUE
12-91	LANDSCAPE EXAMPLES OF IRRIGATION SYSTEMS DWG. 2702-B JAN. 1991

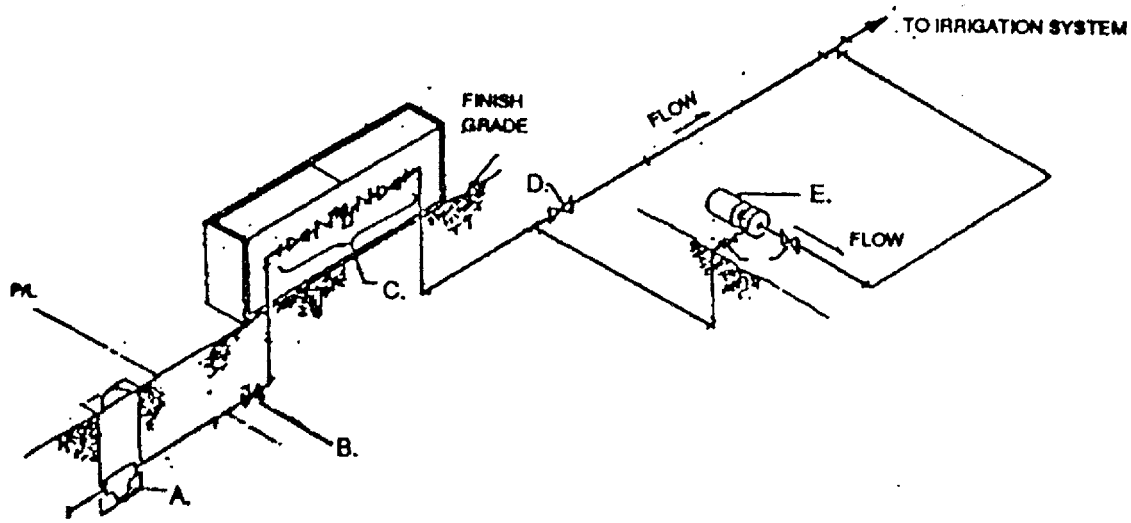

WITH CHEMICAL INJECTION

GENERAL NOTES:

1. See LANDSCAPE DWGS. 2701, 2702-A, and 2703-2712. Also See WATER DWG. 2385

CONSTRUCTION NOTES:

A. Meter.
B. Valve (Electric or Manual, Reference Dwg.)
C. Approved Reduced Pressure Backflow Assembly (RPBA).
D. Control valve.
E. Injector pump.

REVISIONS	CITY OF ALBUQUERQUE
	LANDSCAPE EXAMPLES OF IRRIGATION SYSTEMS WITH CHEMICAL INJECTION DWG. 2702-C JAN. 1991

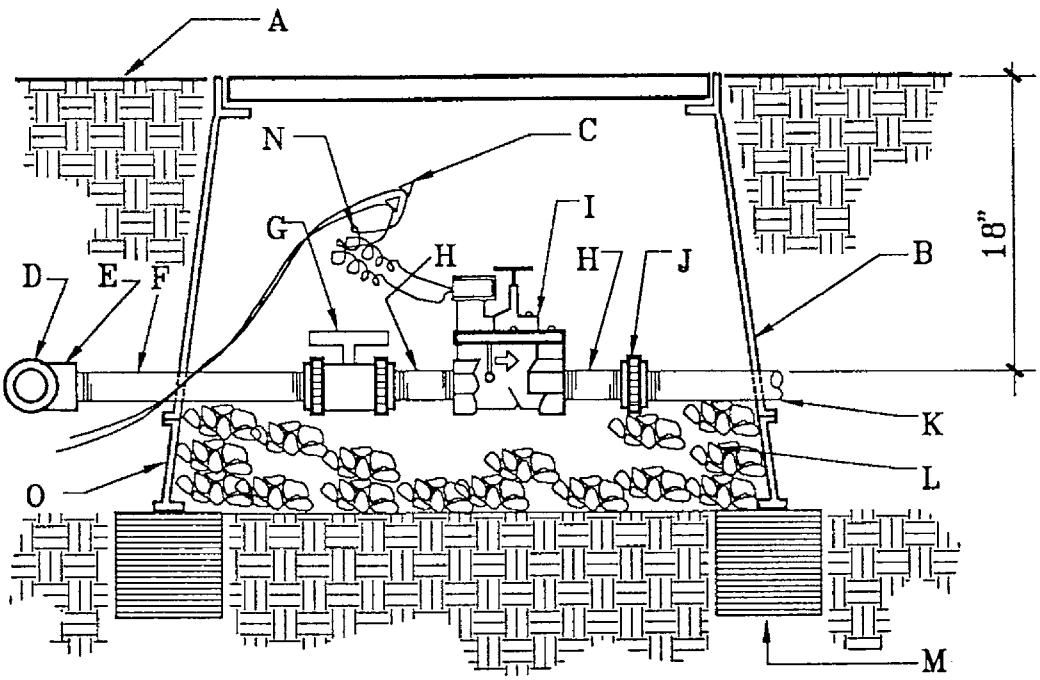

CITY OF ALBUQUERQUE

LANDSCAPE
IRRIGATION ELECTRIC VALVE
DWG. 2703
NOV. 1990

REVISIONS
12/91

GENERAL NOTES:

1. INSTALL AN 8"X8"X16" SOLID CMU BLOCK AT EACH END OF THE VALVE BOX.
2. WASH ROCK SHALL BE INSTALLED FLUSH WITH BOTTOM OF PIPE AND VALVE.

CONSTRUCTION NOTES:

A. FINISH GRADE.

B. BROOKS PRODUCTS INC., 1730 PB-18 BODY (ABS) VALVE BOX WITH 1730 BOLT DOWN COVER (ABS) AND ONE 8" EXTENSION.

C. 3M SCOTCHLOK CONNECTORS.

D. IRRIGATION MAINLINE.

E. IRRIGATION MAINLINE SERVICE TEE OR ELL.

F. SCHEDULE 80 PVC 12" NIPPLE.

G. SPEARS TRUE UNION SCHEDULED 80 PVC BALL VALVE.

H. SCHEDULE 80 PVC 4" NIPPLE.

I. ELECTRIC VALVE. REFERENCE THE DRAWING FOR SIZE.

J. SPEARS SCHEDULE 80 PVC UNION.

K. LATERAL LINE.

L. 1" DIAMETER WASHED ROCK.

M. 8"X8"X16" SOLID CMU BLOCK.

N. 24" WIRE EXPANSION COIL.

CITY OF ALBUQUERQUE

LANDSCAPE
IRRIGATION THRUST BLOCKS
DWG. 2704

NOV. 1990

REVISIONS

3/92

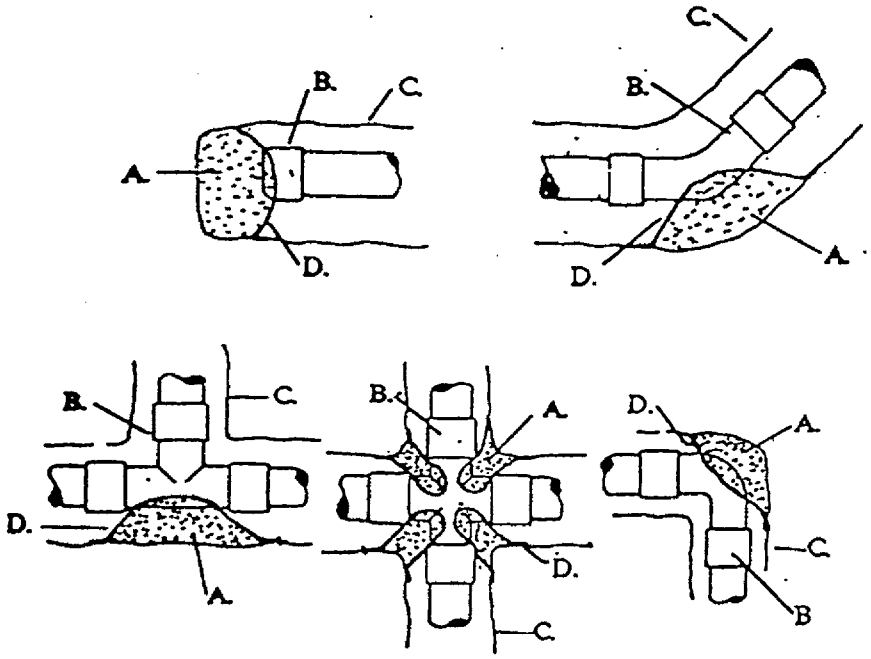

GENERAL NOTES

1. PVC FITTINGS SHALL BE PROTECTED FROM CONCRETE BY PLACING 10 MIL. PLASTIC SHEETING BETWEEN CONCRETE AND FITTING.

CONSTRUCTION NOTES

A. CONCRETE THRUST BLOCK PLACED AGAINST SOLID UNDISTURBED SOIL. (SEE SECTION 101).
B. PVC FITTING.
C. PIPE TRENCH.
D. 10 MIL. PLASTIC SHEETING.

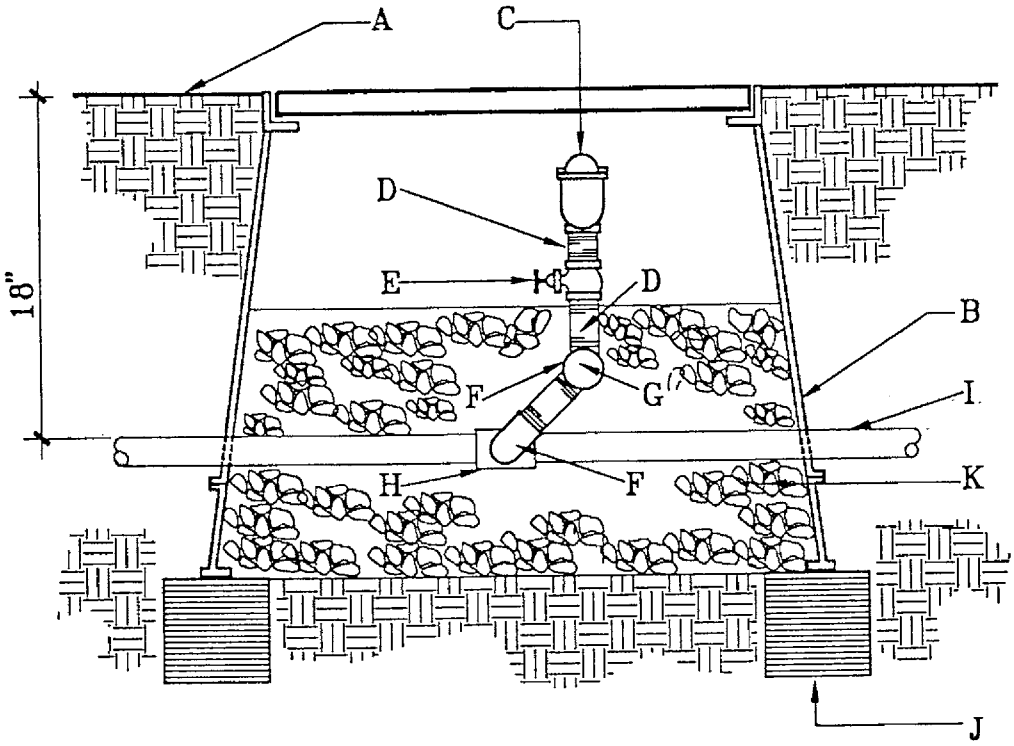

CITY OF ALBUQUERQUE

LANDSCAPE
AIR RELIEF VALVE
DWG. 2705

NOV. 1990

REVISIONS

GENERAL NOTES:

1. INSTALL AN 8"X8"X16" SOLID CMU BLOCK AT EACH END OF THE VALVE BOX.
2. WASH ROCK SHALL BE INSTALLED FLUSH WITH BOTTOM OF GATE VALVE.
3. AIR RELIEF VALVE SHALL BE INSTALLED DOWNSTREAM OF THE MASTERVALVE.

CONSTRUCTION NOTES:

A. FINISH GRADE.

B. BROOKS PRODUCTS INC., 1730 PB-18 BODY (ABS) VALVE BOX WITH 1730 BOLT DOWN COVER (ABS) AND ONE 8" EXTENSION. WHEN AIR RELIEF VALVE IS INSTALLED IN PLAYING FIELD USE 4" PIPE WITH PLASTIC LID.

C. AIR RELIEF VALVE (REFERENCE THE DRAWINGS).

D. SCHEDULE 80 PVC NIPPLE.

E. GATE VALVE.

F SCHEDULE 40 PVC ST. ELL.

G. SCHEDULE 40 PVC ELL.

H. IRRIGATION MAINLINE TEE.

I. IRRIGATION MAINLINE.

J. 8"X8"X16" SOLID CMU BLOCK.

K. 1" DIAMETER WASHED ROCK.

CITY OF ALBUQUERQUE

LANDSCAPE
IRRIGATION GATE VALVE
DWG. 2706

NOV. 1990

REVISIONS

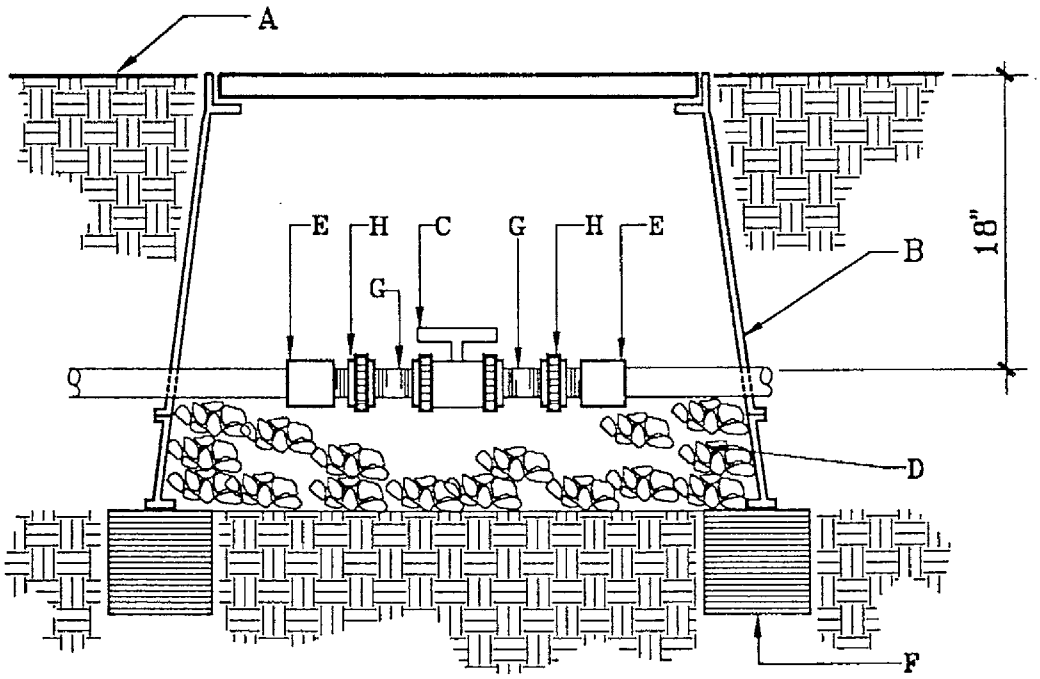

GENERAL NOTES:

1. INSTALL AN 8"X8"X16" SOLID CMU BLOCK AT EACH END OF THE VALVE BOX.
2. WASH ROCK SHALL BE INSTALLED FLUSH WITH BOTTOM OF PIPE AND VALVE.

CONSTRUCTION NOTES:

A. FINISH GRADE.

B. BROOKS PRODUCTS INC., 1730 PB-18 BODY (ABS) VALVE BOX WITH 1730 BOLT DOWN COVER (ABS) AND ONE 8" EXTENSION.

C. SPEARS TRUE UNION SCHEDULED 80 PVC BALL VALVE.

D. 1" DIAMETER WASHED ROCK.

E. PVC MIP ADAPTER.

F. 8"X8"X16" SOLID CMU BLOCK.

G. SCHEDULE 80 PVC 4" NIPPLE.

H. SPEARS SCHEDULE 80 PVC UNION.

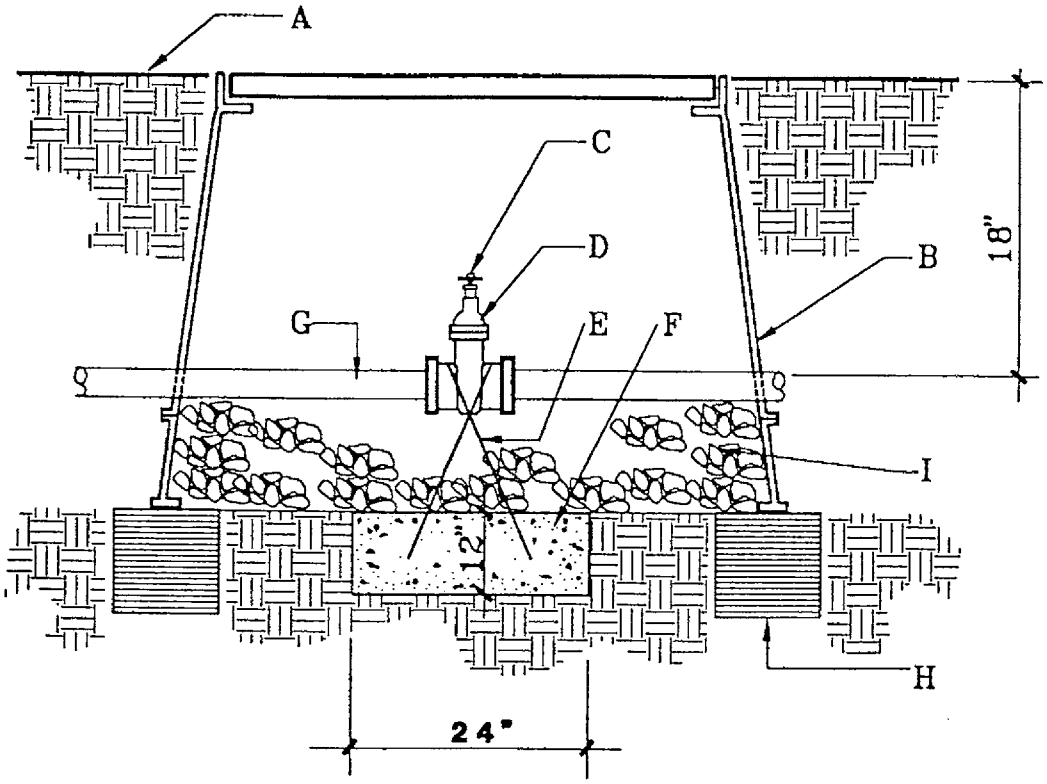

CITY OF ALBUQUERQUE

LANDSCAPE
IRRIGATION MAINLINE
ISOLATION VALVE
DWG. 2707

NOV. 1990

REVISIONS
12/91
3/92

GENERAL NOTES:

1. INSTALL AN 8"X8"X16" CMU BLOCK AT EACH CORNER OF THE VALVE BOX.

CONSTRUCTION NOTES:

A. FINISH GRADE.

B. BROOKS PRODUCTS INC., 1730 PB-18 BODY (ABS) VALVE BOX WITH 1730 BOLT DOWN COVER (ABS) AND ONE 8" EXTENSION.

C. 2" OPERATING NUT.

D. PEGLER "O" RING GASKET VALVE 708 A (LINE SIZE).

E. NO. 4 REBAR.

F. THRUST BLOCK-4000 PSI CONCRETE PLACED AGAINST UNDISTURBED SOIL.

G. IRRIGATION MAINLINE.

H. 8"X8"X16" CMU BLOCK.

I. 1" DIAMETER WASHED ROCK.

CITY OF ALBUQUERQUE

LANDSCAPE
QUICK COUPLER VALVE
DWG. 2708
NOV. 1998

REVISIONS

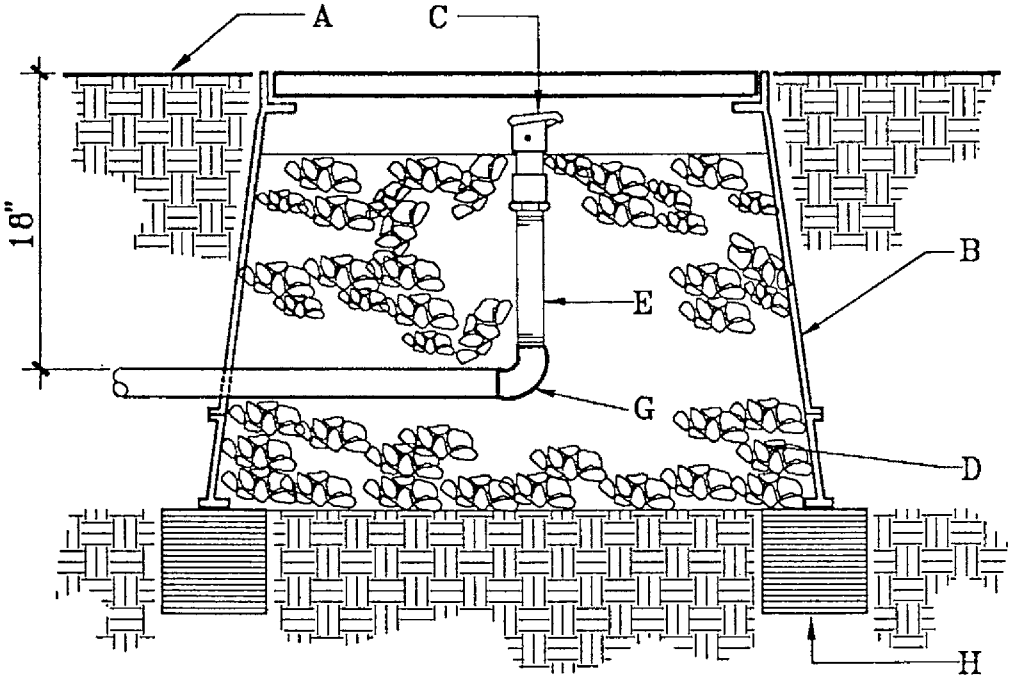

GENERAL NOTES:

1. INSTALL AN 8"X8"X16" SOLID CMU BLOCK AT EACH CORNER OF THE VALVE BOX.
2. INSTALL 1" DIAMETER WASHED ROCK BELOW THE VALVE BOX. EXTEND WASHED ROCK UP TO COLLAR OF QUICK COUPLER VALVE.
3. INSTALL A GATE VALVE IMMEDIATELY UPSTREAM OF QUICK COUPLER VALVE.

CONSTRUCTION NOTES:

A. FINISH GRADE.

B. BROOKS PRODUCTS INC., 1730 PB-18 BODY (ABS) VALVE BOX WITH 1730 BOLT DOWN COVER (ABS) AND ONE 8" EXTENSION. WHEN QUICK COUPLER VALVE IS INSTALLED IN PLAYING FIELD USE 4" PIPE WITH PLASTIC LID.

C. RAINBIRD 33 DRC QUICK COUPLER VALVE.

D. 1" DIAMETER WASHED ROCK.

E. 12" SCH. 80 PVC RISER.

F. IRRIGATION MAINLINE.

G. SCHEDULE 40 PVC ELL SXT.

H. 8"X8"X16" SOLID CMU BLOCK.

CITY OF ALBUQUERQUE

LANDSCAPE
SPRINKLER HEAD
W/ FLEX PIPE ASSEMBLY
DWG. 2709

NOV. 1990

REVISIONS

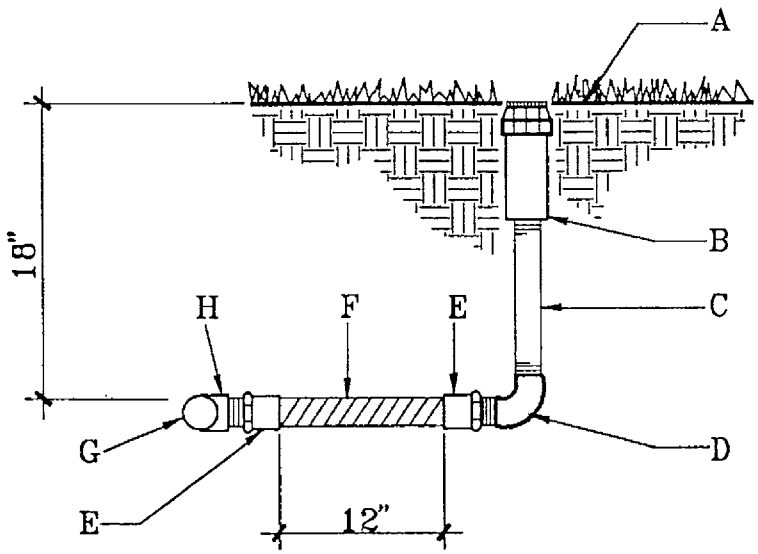

GENERAL NOTES:

1. THIS DETAIL SHALL BE USED FOR POP-UP SHRUB SPRAY, POP-UP LAWN SPRAY, GEAR DRIVEN AND ROTARY SPRINKLER HEADS.

2. LATERAL LINE PRESSURE TESTING SHALL BE COMPLETED PRIOR TO INSTALLATION OF FLEX PIPE ASSEMBLY. LATERAL LINE TESTING SHALL BE ACCOMPLISHED BY INSTALLING A PLUG IN THE OUTLET OF LATERAL LINE TEES AND ELLS.

3. TOP OF SPRINKLER HEAD SHALL BE SET FLUSH WITH FINISH GRADE.

CONSTRUCTION NOTES:

A. FINISH GRADE.

B. SPRINKLER HEAD (REFERENCE THE DRAWINGS FOR TYPE).

C. SCH. 80 PVC NIPPLE. LENGTH VARIES DEPENDING UPON SIZE OF SPRINKLER HEAD.

D. SCH. 40 PVC THREADED ELL.

E. SCH. 40 PVC MIP ADAPTER.

F. PVC FLEXIBLE VINYL PIPE STD. IPS FROM AGRICULTURAL PRODUCTS INC. (818-768-3303).

G. LATERAL PIPE.

H. SCH. 40 PVC SXSXT TEE OR SXT ELL.

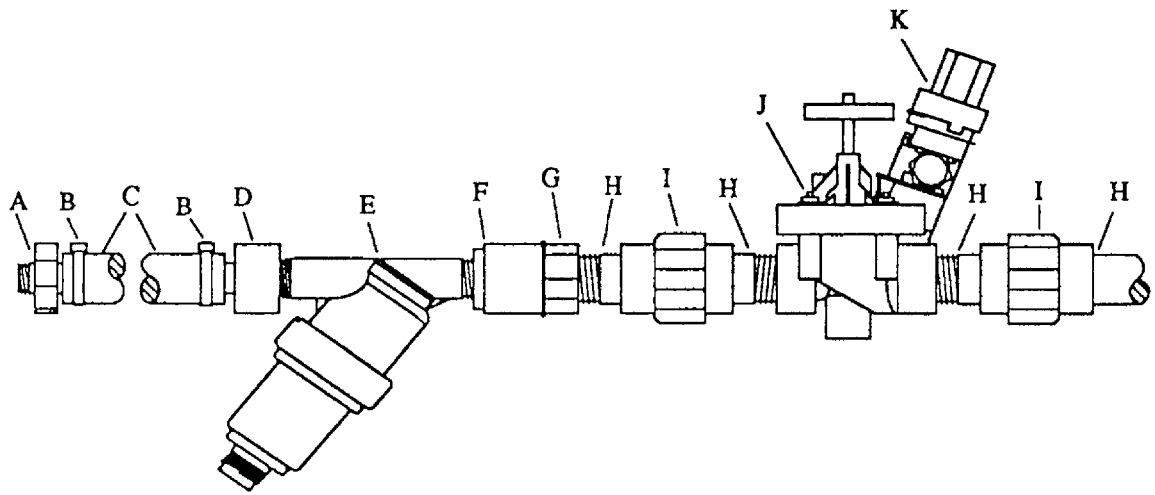

CONSTRUCTION NOTES:

A. SCH. 40 PVC MIP ADAPTER.
B. 3/4" CLAMP.
C. POLY DRIP LINE.
D. SCH. 40 PVC FEMALE ADAPTER.
E. DRIP 'Y' FILTER.
F. SCH. 40 PVC MIP ADAPTER REDUCER 1"X3/4" SXT.
G. SCH. 40 SXT COUPLING 1".
H. SCH. 80 PVC SXT NIPPLE 1".
I. SCH. 80 PVC UNION.
J. ELECTRIC CONTROL VALVE.
K. PRS 2.

CITY OF ALBUQUERQUE

REVISIONS

LANDSCAPE
IRRIGATION DRIP VALVE
DWG. 2709-A JUNE 1991

CITY OF ALBUQUERQUE

LANDSCAPE
DRINKING FOUNTAIN W/
BALL DRAIN
DWG. 2709-B

DEC. 1992

REVISIONS

12/92

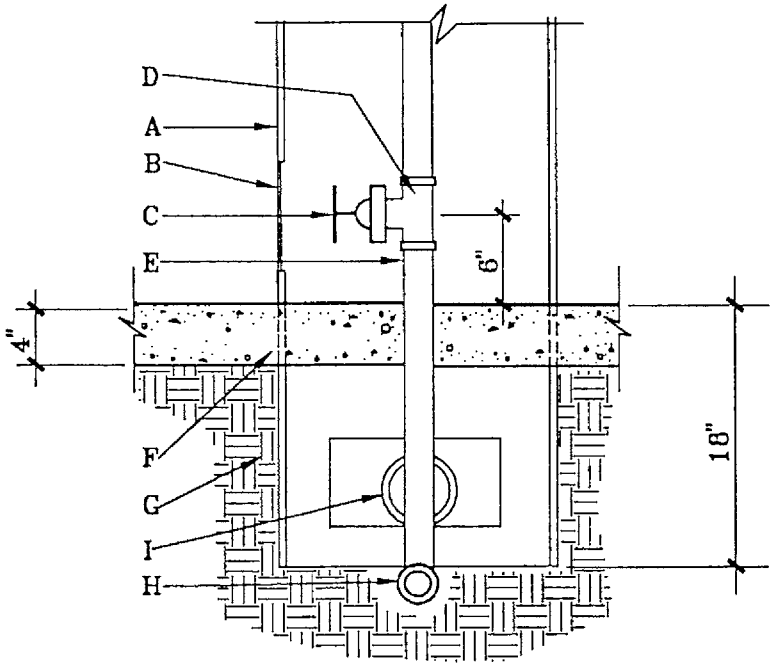

CONSTRUCTION NOTES:

A. DRINKING FOUNTAIN (SEE PRODUCT SCHEDULE) ASSEMBLE ACCORDING TO MANUFACTURER'S SPECS. INSTALL VERTICAL.

B. DOOR FOR OPENING TO BALL DRAIN AREA.

C. BALL DRAIN, CHAMPION DV050 1/2".

D. GALVANIZED TEE.

E. 1/2" NYLON REINFORCED TUBING.

F. CONCRETE PAVING.

G. COMPACTED BACKFILL.

H. WATER SUPPLY LINE TO VALVE BOX W/ GATE VALVE. SEE IRRIGATION PLAN FOR VALVE LOCATION.

I. 1 1/2" PVC DRAIN TO DRINKING FOUNTAIN SUMP.

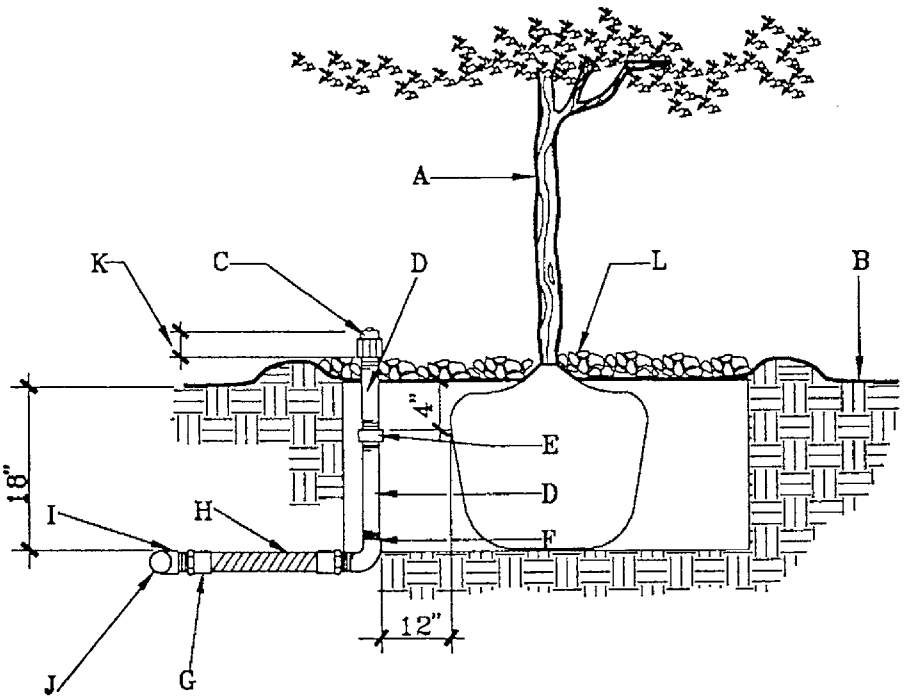

CITY OF ALBUQUERQUE

LANDSCAPE
IRRIGATION BUBBLER HEAD
AT TREE

DWG. 2710

NOV. 1990

REVISIONS

12/91

GENERAL NOTES:

1. LATERAL LINE PRESSURE TESTING SHALL BE COMPLETED PRIOR TO INSTALLATION OF FLEX PIPE ASSEMBLY. LATERAL LINE TESTING SHALL BE ACCOMPLISHED BY INSTALLING A PLUG IN THE OUTLET OF LATERAL LINE TEES AND ELLS.

2. BUBBLER SHALL ALWAYS BE INSTALLED ON THE UPHILL SIDE OF THE TREE.

CONSTRUCTION NOTES:

A. TREE.

B. FINISH GRADE.

C. BUBBLER HEAD (REFERENCE IRRIGATION LEGEND).

D. SCH. 80 PVC NIPPLE.

E. SCH. 40 PVC THREADED COUPLER.

F. SCH. 40 PVC THREADED ELL.

G. SCH. 40 PVC MIP ADAPTER.

H. PVC FLEXIBLE VINYL PIPE, STD., IPS FROM AGRICULTURAL PRODUCTS INC. (818-768-3303).

I. SCH. 40 PVC SXSXT TEE OR SXT ELL.

J. LATERAL PIPE.

K. TOP OF BUBBLER LEVEL WITH TOP OF BARK MULCH OR MAX. 1" ABOVE TOP OF BARK MULCH.

L. 4" BARK MULCH.

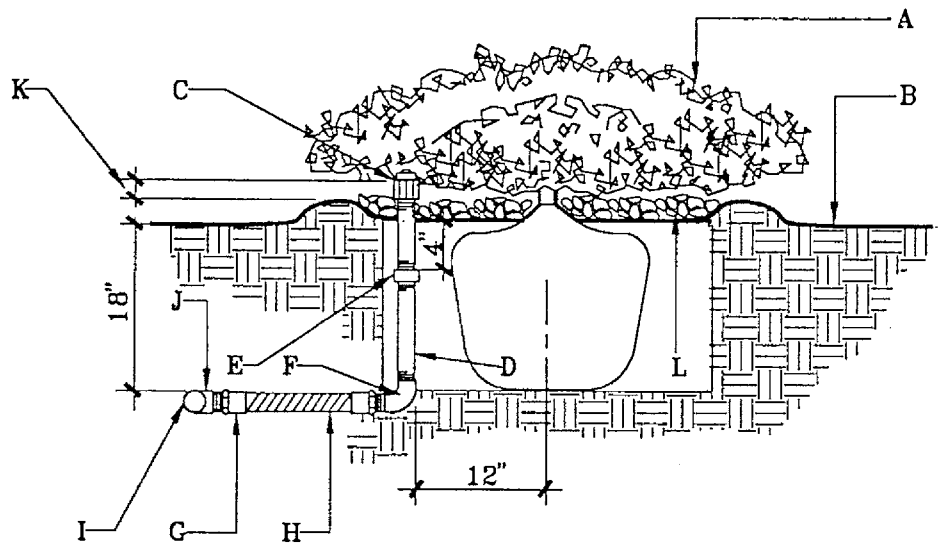

CITY OF ALBUQUERQUE

LANDSCAPE
IRRIGATION BUBBLER HEAD
AT SHRUB
DWG. 2711

NOV. 1990

REVISIONS
12/91

GENERAL NOTES:

1. LATERAL LINE PRESSURE TESTING SHALL BE COMPLETED PRIOR TO INSTALLATION OF FLEX PIPE ASSEMBLY. LATERAL LINE TESTING SHALL BE ACCOMPLISHED BY INSTALLING A PLUG IN THE OUTLET OF LATERAL LINE TEES AND ELLS.

2. BUBBLER SHALL ALWAYS BE INSTALLED ON THE UPHILL SIDE OF THE SHRUB.

CONSTRUCTION NOTES:

A. SHRUB.

B. FINISH GRADE.

C. BUBBLER HEAD (REFERENCE IRRIGATION LEGEND).

D. SCH. 80 PVC NIPPLE.

E. SCH. 40 PVC THREADED COUPLER.

F. SCH. 40 PVC THREADED ELL.

G. SCH. 40 PVC MIP ADAPTER.

H. PVC FLEXIBLE VINYL PIPE STD. IPS FROM AGRICULTURAL PRODUCTS INC. (818-768-3303).

I. LATERAL PIPE.

J. SCH. 40 PVC SXSXT TEE OR SXT ELL.

K. TOP OF BUBBLER LEVEL WITH TOP OF BARK MULCH OR MAX. 1" ABOVE TOP OF BARK MULCH.

L. 4" BARK MULCH.

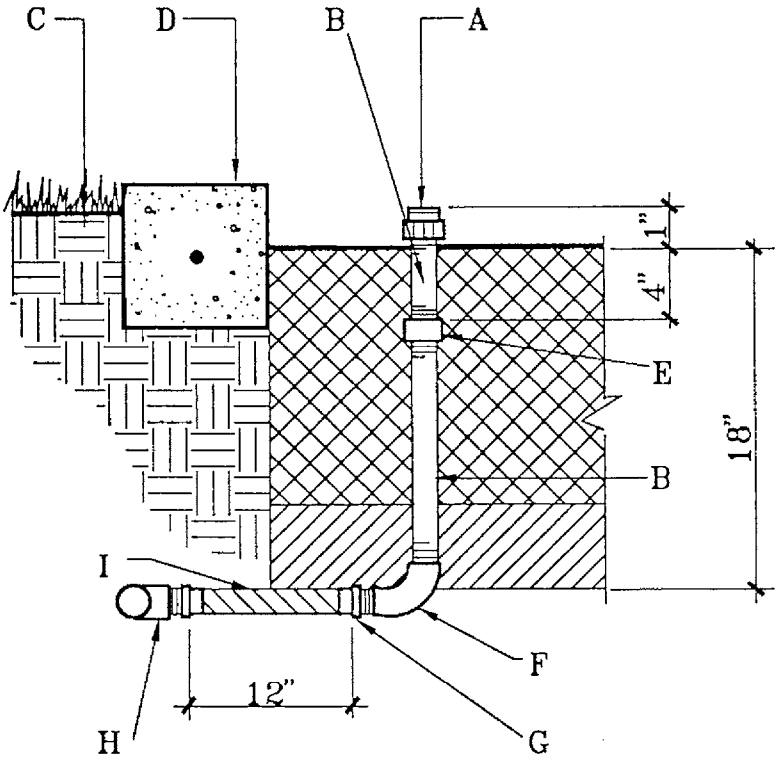

CITY OF ALBUQUERQUE

LANDSCAPE
BUBBLER DETAIL
IN FLOWER BED
DWG. 2711-A

NOV. 1990

REVISIONS
12/91
3/92

CONSTRUCTION NOTES:

A. BUBBLER HEAD (REFERENCE IRRIGATION LEGEND).
TOP OF BUBBLER LEVEL WITH TOP OF PLANTING MIX OR MAX. 1" ABOVE TOP OF PLANTING MIX.

B. SCH. 80 PVC NIPPLE

C. FINISH GRADE.

D. 4000 PSI CONCRETE MOW STRIP.

E. SCH. 40 PVC THREADED COUPLER.

F. SCH. 40 PVC THREADED ELL.

G. SCH. 40 PVC MIP ADAPTER.

H. SCH. 40 PVC SXSXT TEE OR SXT ELL.

I. PVC FLEXIBLE VINYL PIPE STD. IPS FROM AGRICULTURAL PRODUCTS INC. (818-768-3303)

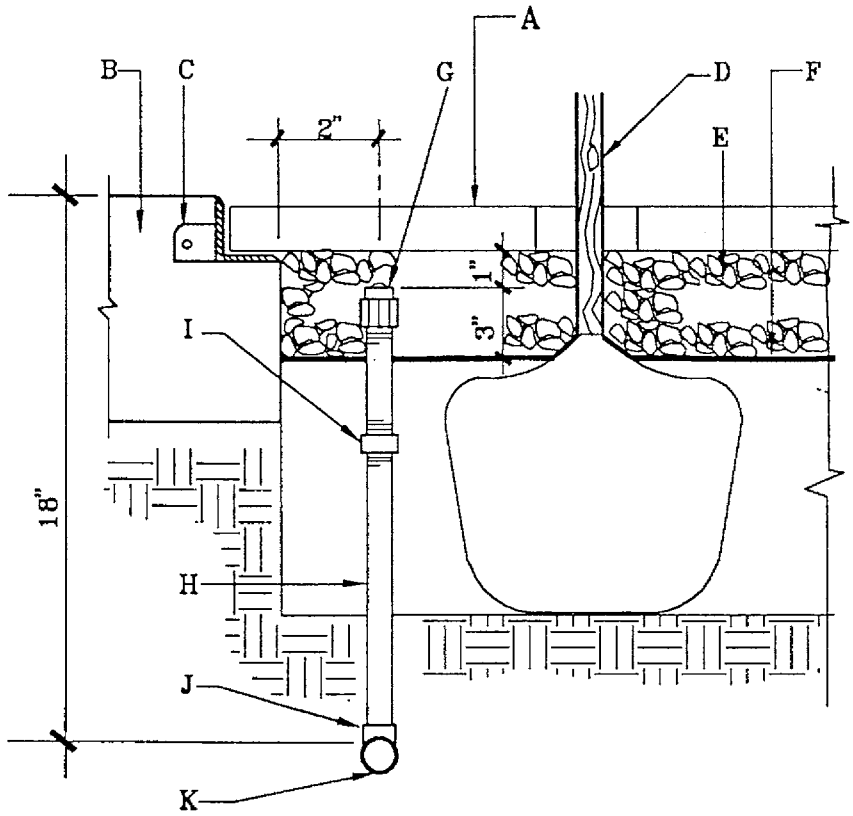

CITY OF ALBUQUERQUE

LANDSCAPE
IRRIGATION BUBBLER HEAD
IN TREE GRATE
DWG. 2712

NOV. 1990

REVISIONS
12/91
3/92

GENERAL NOTES:

1. LATERAL LINE PRESSURE TESTING SHALL BE COMPLETED PRIOR TO INSTALLATION OF FLEX PIPE ASSEMBLY. LATERAL LINE TESTING SHALL BE ACCOMPLISHED BY INSTALLING A PLUG IN THE OUTLET OF LATERAL LINE TEES AND ELLS.
2. BUBBLER SHALL ALWAYS BE INSTALLED ON THE UPHILL SIDE OF THE TREE.
3. PVC PIPE SHALL NOT BE INSTALLED UNDER THE LOCATION OF THE TREE BALL.

CONSTRUCTION NOTES:

A. TREE GRATE.
B. 4000 PSI CONCRETE.
C. TREE GRATE FRAME.
D. TREE.
E. 4" BARK MULCH.
F. FINISH GRADE.
G. BUBBLER HEAD (REFERENCE IRRIGATION LEGEND).
H. SCH. 80 PVC NIPPLE.
I. SCH. 40 PVC THREADED COUPLER.
J. SCH. 40 PVC SXSXT TEE OR SXT ELL.
K. LATERAL PIPE.

CITY OF ALBUQUERQUE

LANDSCAPE
TREE PLANTED IN TURF
DWG. 2713

NOV. 1990

REVISIONS
12/91
12/92

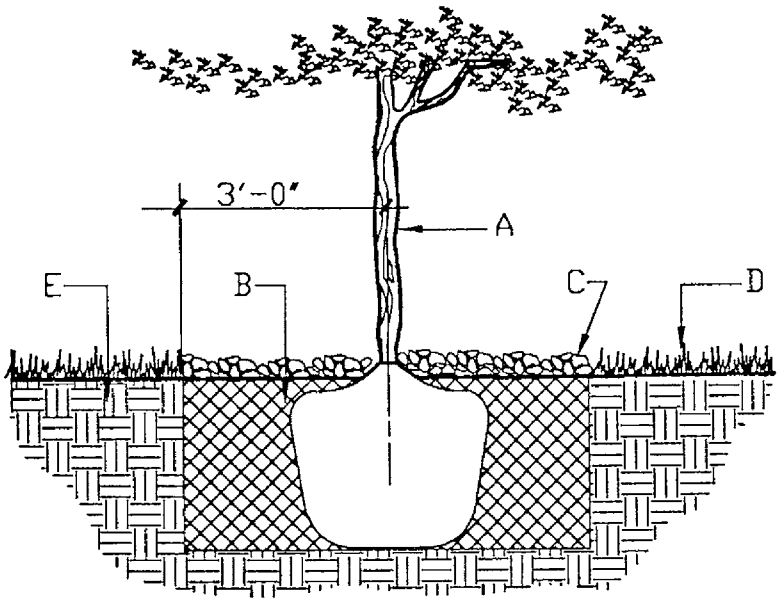

GENERAL NOTES:

1. ROOTBALL SHALL BE PLACED ON UNDISTURBED SOIL TO PREVENT TREE FROM SETTLING.

2. TOP OF ROOTBALL INDICATES LEVEL AT WHICH TREE WAS GROWN AND DUG; THIS REPRESENTS THE LEVEL AT WHICH THE TREE SHOULD BE INSTALLED; THAT LEVEL MAY BE EXCEEDED BY ONLY A ONE INCH LAYER OF SOIL.

3. PRIOR TO BACKFILLING TREE, ALL WIRE, ROPE AND SYNTHETIC MATERIALS SHALL BE REMOVED FROM THE TREE AND THE PLANTING PIT.

4. PRIOR TO BACKFILLING ALL BURLAP SHALL BE CUT AWAY EXCEPT FROM BOTTOM OF THE ROOTBALL.

CONSTRUCTION NOTES:

A. TREE.
B. BACKFILL WITH EXISTING SOIL.
C. 4" DEPTH OF BARK MULCH.
D. TURF AT FINISH GRADE.
E. UNDISTURBED SOIL.

CITY OF ALBUQUERQUE

LANDSCAPE
ISOLATED TREE PLANTING
DWG. 2714

NOV. 1990

REVISIONS
12/91
12/92

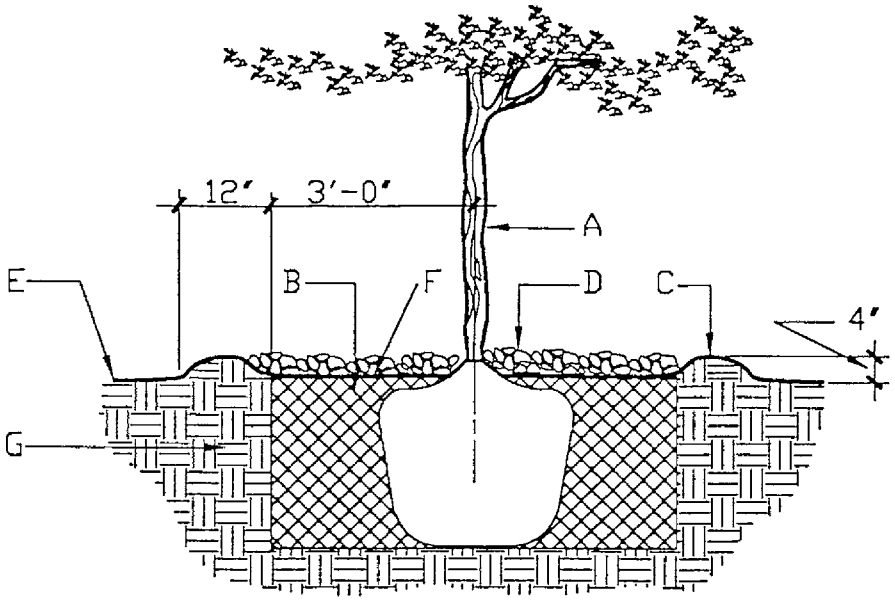

GENERAL NOTES:

1. ROOTBALL SHALL BE PLACED ON UNDISTURBED SOIL TO PREVENT TREE FROM SETTLING.

2. TOP OF ROOTBALL INDICATES LEVEL AT WHICH TREE WAS GROWN AND DUG; THIS REPRESENTS THE LEVEL AT WHICH THE TREE SHOULD BE INSTALLED; THAT LEVEL MAY BE EXCEEDED BY ONLY A ONE INCH LAYER OF SOIL.

3. PRIOR TO BACKFILLING TREE, ALL WIRE, ROPE AND SYNTHETIC MATERIALS SHALL BE REMOVED FROM THE TREE AND THE PLANTING PIT.

4. PRIOR TO BACKFILLING ALL BURLAP SHALL BE CUT AWAY EXCEPT FROM BOTTOM OF THE ROOTBALL.

CONSTRUCTION NOTES:

A. TREE.
B. BACKFILL WITH EXISTING SOIL.
C. EARTH BERM AROUND WATER RETENTION BASIN.
D. 4" DEPTH OF BARK MULCH.
E. FINISH GRADE.
F. WATER RETENTION BASIN.
G. UNDISTURBED SOIL.

CITY OF ALBUQUERQUE

LANDSCAPE
TREE IN PLANTER
DWG. 2715

NOV. 1990

REVISIONS
12/91

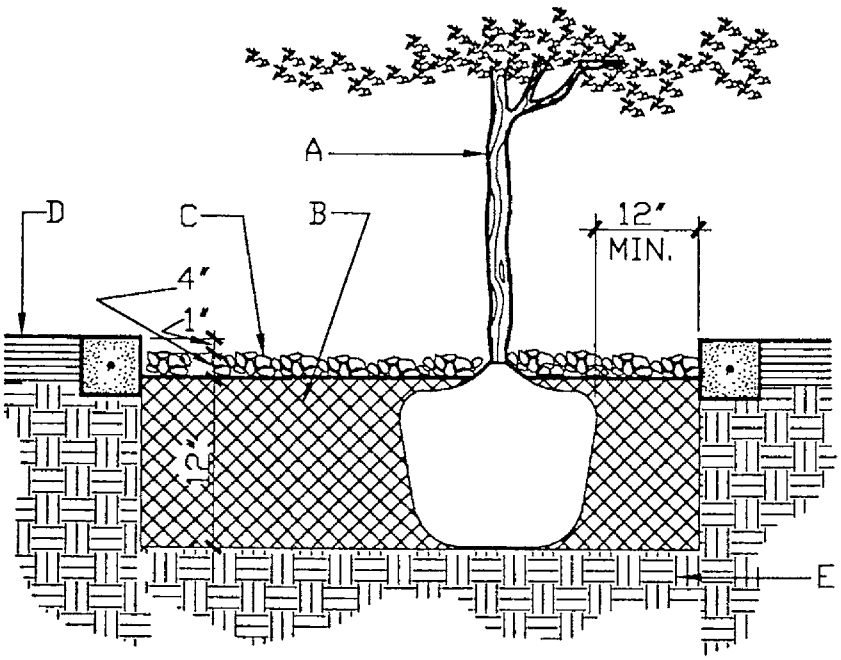

GENERAL NOTES:

1. EXISTING SOIL WITHIN THE SHRUB & TREE PLANTER SHALL BE REMOVED AND REPLACED WITH THE SPECIFIED PLANTING SOIL MIXTURE.

2. ROOTBALL SHALL BE PLACED ON UNDISTURBED SOIL TO PREVENT TREE FROM SETTLING.

3. TOP OF ROOTBALL INDICATES LEVEL AT WHICH TREE WAS GROWN AND DUG; THIS REPRESENTS THE LEVEL AT WHICH THE TREE SHOULD BE INSTALLED; THAT LEVEL MAY BE EXCEEDED BY ONLY A ONE INCH LAYER OF SOIL.

4. PRIOR TO BACKFILLING TREE, ALL WIRE, ROPE AND SYNTHETIC MATERIALS SHALL BE REMOVED FROM THE TREE AND THE PLANTING PIT.

5. PRIOR TO BACKFILLING, ALL BURLAP SHALL BE CUT AWAY EXCEPT FROM BOTTOM OF THE ROOTBALL.

CONSTRUCTION NOTES:

A. TREE.

B. PLANTING SOIL MIXTURE. (REFERENCE THE SPECIFICATION).

C. 4" DEPTH OF BARK MULCH.

D. MATERIAL VARIES (REFERENCE THE DRAWING).

E. UNDISTURBED SOIL.

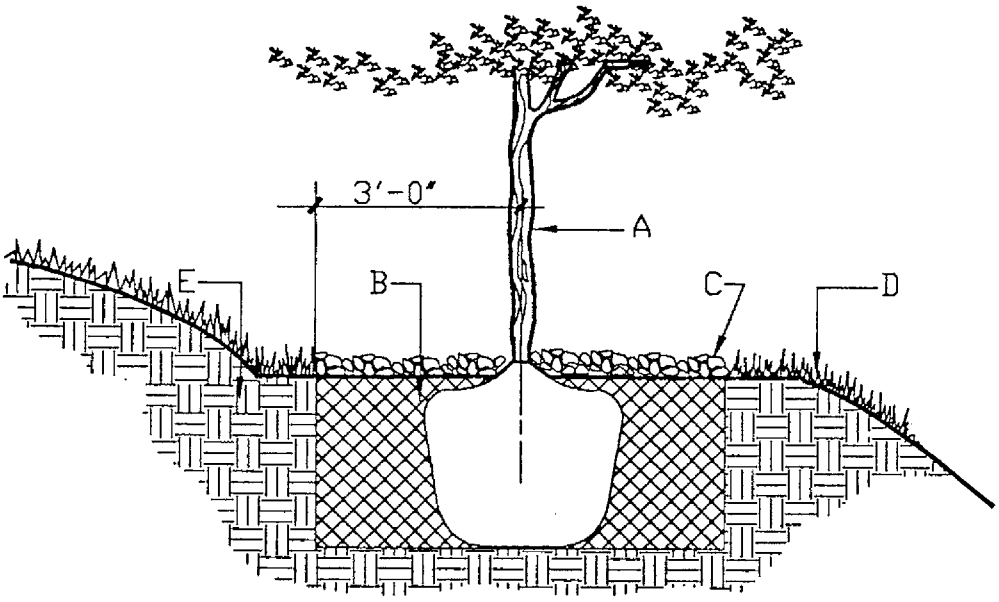

CITY OF ALBUQUERQUE

LANDSCAPE
TREE PLANTED ON A SLOPE
DWG. 2716

NOV. 1990

REVISIONS
12/91
12/92

GENERAL NOTES:

1. ROOTBALL SHALL BE PLACED ON UNDISTURBED SOIL TO PREVENT TREE FROM SETTLING.

2. TOP OF ROOTBALL INDICATES LEVEL AT WHICH TREE WAS GROWN AND DUG; THIS REPRESENTS THE LEVEL AT WHICH THE TREE SHOULD BE INSTALLED; THAT LEVEL MAY BE EXCEEDED BY ONLY A ONE INCH LAYER OF SOIL.

3. PRIOR TO BACKFILLING TREE, ALL WIRE, ROPE AND SYNTHETIC MATERIALS SHALL BE REMOVED FROM THE TREE AND THE PLANTING PIT.

4. PRIOR TO BACKFILLING ALL BURLAP SHALL BE CUT AWAY EXCEPT FROM BOTTOM OF THE ROOTBALL.

5. THE BARK MULCH SHALL BE INSTALLED TWO INCHES BELOW FINISH GRADE AT THE PERIMETER OF PLANTING PIT AND FOUR INCHES THICK ABOVE THE PLANTING PIT AND ROOTBALL.

6. WHEN THE TREE IS PLANTED, A LEVEL SPACE SHALL BE GRADED IN ORDER TO PLANT THE TREE LEVEL. THE MINIMUM AREA OF THE LEVEL SPACE SHALL BE THE SAME AS THE DIAMETER OF THE DRIP LINE OF THE TREE.

7. AFTER THE TREE IS PLANTED, THE DEGREE OF SLOPE ABOVE AND BELOW THE TREE SHALL NOT EXCEED THE EXISTING DEGREE OF SLOPE PRIOR TO PLANTING.

CONSTRUCTION NOTES:

A. TREE.

B. BACKFILL WITH EXISTING SOIL.

C. 4" DEPTH OF BARK MULCH.

D. TURF AT FINISH GRADE.

E. UNDISTURBED SOIL.

CITY OF ALBUQUERQUE

LANDSCAPE
ISOLATED SHRUB PLANTING
DWG. 2717

NOV. 1990

REVISIONS
12/91
12/92

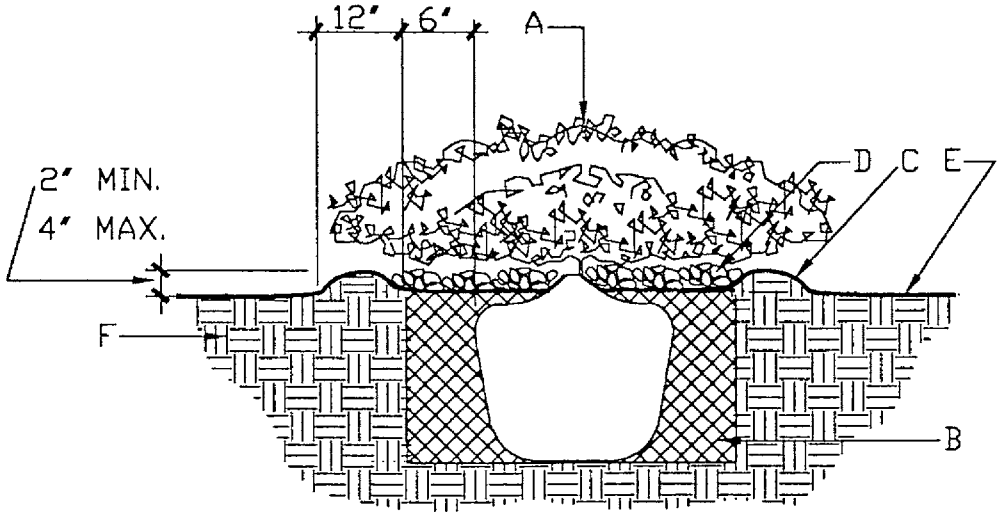

GENERAL NOTES:

1. THE OUTSIDE DIAMETER OF THE WATER RETENTION BASIN SHALL BE TWICE THE DIAMETER OF THE SHRUB PLANTING PIT.

CONSTRUCTION NOTES:

A. SHRUB.

B. BACKFILL WITH EXISTING SOIL.

C. EARTH BERM AROUND WATER RETENTION BASIN.

D. 4" DEPTH OF BARK MULCH.

E. FINISH GRADE.

F. UNDISTURBED SOIL.

CITY OF ALBUQUERQUE

LANDSCAPE
SHRUB BED
DWG. 2718

NOV. 1990

REVISIONS

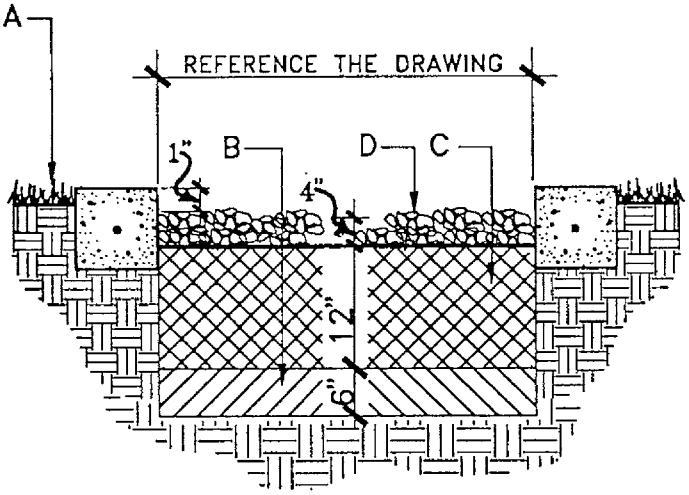

GENERAL NOTES:

1. EXISTING SOIL WITHIN THE FLOWER BED SHALL BE REMOVED AND REPLACED WITH THE SPECIFIED PLANTING SOIL MIXTURE.

CONSTRUCTION NOTES:

A. MATERIAL VARIES (REFERENCE THE DRAWINGS).

B. LOOSEN SOIL TO DEPTH OF 6".

C. PLANTING SOIL MIXTURE (REFERENCE THE SPECIFICATIONS).

D. BARK MULCH.

CITY OF ALBUQUERQUE

LANDSCAPE
FLOWER BED
DWG. 2719

NOV. 1990

REVISIONS

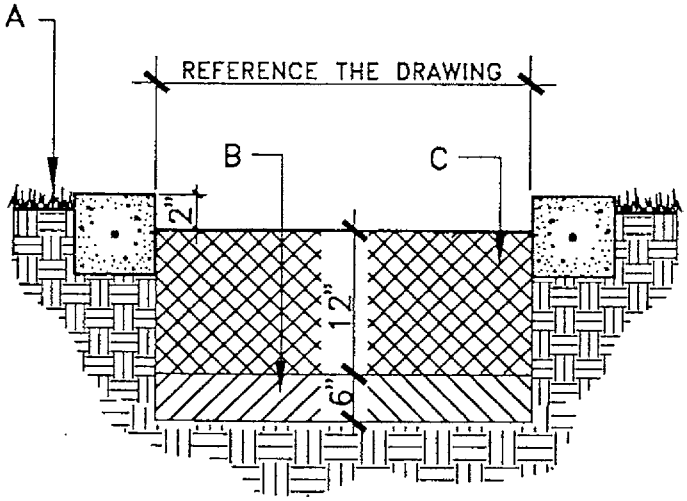

GENERAL NOTES:

1. EXISTING SOIL WITHIN THE FLOWER BED SHALL BE REMOVED AND REPLACED WITH THE SPECIFIED PLANTING SOIL MIXTURE.

CONSTRUCTION NOTES:

A. MATERIAL VARIES (REFERENCE THE DRAWINGS).

B. LOOSEN SOIL TO DEPTH OF 6".

C. PLANTING SOIL MIXTURE (REFERENCE THE SPECIFICATIONS).

CITY OF ALBUQUERQUE

LANDSCAPE
CONCRETE WALK
DWG. 2720

NOV. 1990

REVISIONS
12/91
3/92

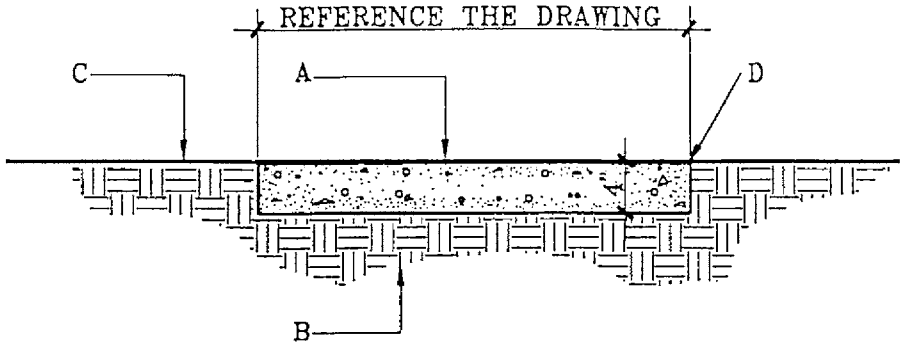

GENERAL NOTES:

1. CONTROL JOINTS SHALL BE PLACED AT 5' O.C..
2. EXPANSION JOINTS SHALL BE PLACED AT 20' O.C., AND WHERE THE CONCRETE WALK ABUTS ANOTHER HARD SURFACE.
3. THE CONCRETE WALK SHALL BE SLOPED AT 1/4" PER FOOT ACROSS THE WIDTH OF THE WALK. REFERENCE THE GRADING PLAN FOR DIRECTION OF SLOPE.

CONSTRUCTION NOTES:

A. 4000 PSI CONCRETE SIDEWALK WITH MEDIUM BRUSH FINISH. (SEE SECTION 340).

B. SUBGRADE COMPACTED TO 95%. (SEE SECTION 301).

C. MATERIAL VARIES. (REFERENCE THE DRAWINGS).

D. TOOLED EDGE. (TYP.)

CITY OF ALBUQUERQUE

LANDSCAPE
CRUSHED SAND PATH W/
CONCRETE MOWSTRIP
DWG. 2721

NOV. 1990

REVISIONS
12/91
3/92

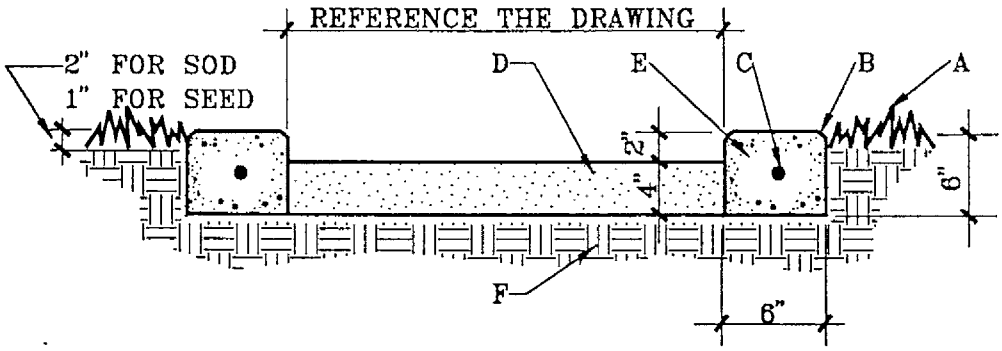

GENERAL NOTES:

1. CONTROL JOINTS SHALL BE PLACED AT 5' O.C..
2. EXPANSION JOINTS SHALL BE PLACED AT 20' O.C., AND WHERE THE MOWSTRIP ABUTS ANOTHER HARD SURFACE.
3. THE CONCRETE MOWSTRIP MAY BE EXTRUDED, BUT SHALL MEET THE STANDARD OF THIS DETAIL.
4. A SAMPLE OF THE CRUSHED SAND SHALL BE SUBMITTED TO THE OWNER'S REPRESENTATIVE FOR APPROVAL PRIOR TO INSTALLATION.

CONSTRUCTION NOTES:

A. SOD OR SEEDED TURF (REFERENCE THE DRAWING).

B. TOOLED EDGE. (TYP.)

C. #3 REBAR, HORIZONTAL AND CONTINUOUS.

D. CRUSHED SAND ROLLED FOR COMPACTION.

E. 4000 PSI CONCRETE MOWSTRIP WITH BRUSH FINISH. (SEE SECTION 101).

F. SUBGRADE COMPACTED TO 95%. (SEE SECTION 301).

CITY OF ALBUQUERQUE

LANDSCAPE
ASPHALT PATH W/
CONCRETE MOWSTRIP
DWG. 2722

NOV. 1990

REVISIONS
12/91
3/92

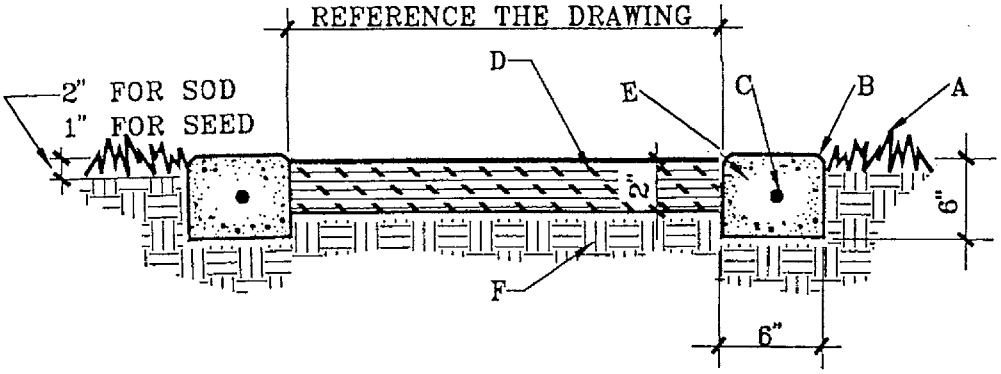

GENERAL NOTES:

1. CONTROL JOINTS SHALL BE PLACED AT 5' O.C..
2. EXPANSION JOINTS SHALL BE PLACED AT 20' O.C., AND WHERE THE MOWSTRIP ABUTS ANOTHER HARD SURFACE.
3. THE CONCRETE MOWSTRIP MAY BE EXTRUDED, BUT SHALL MEET THE STANDARD OF THIS DETAIL.
4. THE ASPHALT PATH SHALL BE SLOPED AT 1/4" PER FOOT ACROSS THE WIDTH OF THE PATH. REFERENCE THE GRADING PLAN FOR DIRECTION OF SLOPE.

CONSTRUCTION NOTES:

A. SOD OR SEEDED TURF (REFERENCE THE DRAWING).

B. TOOLED EDGE.

C. #3 REBAR, HORIZONTAL AND CONTINUOUS.

D. 2" ASPHALT SURFACE COURSE WITH 1500 LBS. STABILITY.

E. 4000 PSI CONCRETE MOWSTRIP WITH BRUSH FINISH. (SEE SECTION 101).

F. SUBGRADE COMPACTED TO 95%. (SEE SECTION 301).

CITY OF ALBUQUERQUE

LANDSCAPE
BOLLARD DETAIL
DWG. 2723

NOV. 1990

REVISIONS

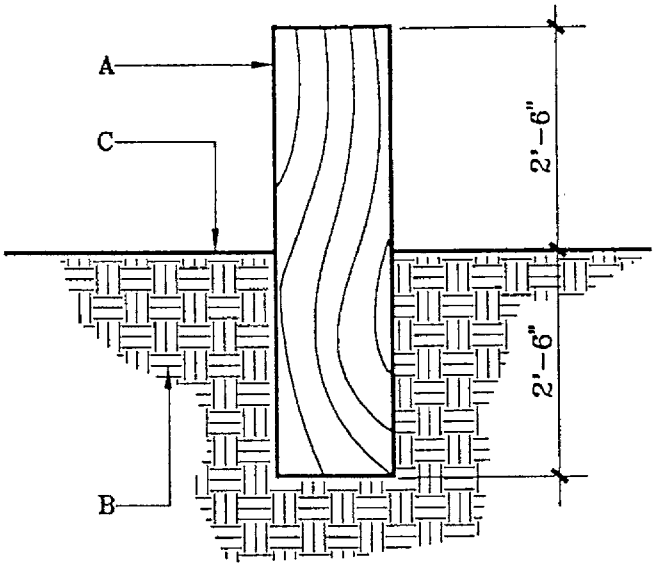

GENERAL NOTES:

1. BOLLARD SHALL BE PONDEROSA PINE TREATED WITH COPPER ARSENATE IN ACCORDANCE WITH THE REQUIREMENTS OF AWPA C-14. WOOD PRESERVATIVES SHALL CONFORM WITH THE REQUIREMENTS OF AASHTO M-133.
2. BOLLARD SHALL BE INSTALLED IN A HOLE EXCAVATED TO A MINIMUM SIZE OF 24"X24"X30". BACKFILL AROUND BOLLARD SHALL BE COMPACTED TO 95%.

CONSTRUCTION NOTES:

A. WOOD BOLLARD; 8"X8"X5'-0".

B. SUBGRADE COMPACTED TO 95%. (SEE SECTION 301).

C. MATERIAL VARIES (REFERENCE THE DRAWING).

CITY OF ALBUQUERQUE

LANDSCAPE
BOLLARD IN CONCRETE WALK
DWG. 2724

NOV. 1990

REVISIONS
3/92

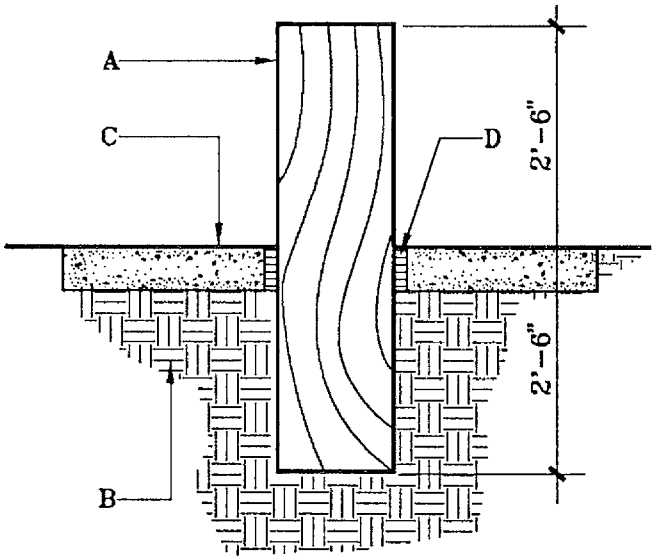

GENERAL NOTES:

1. BOLLARD SHALL BE PONDEROSA PINE TREATED WITH COPPER ARSENATE IN ACCORDANCE WITH THE REQUIREMENTS OF AWPA C-14. WOOD PRESERVATIVES SHALL CONFORM WITH THE REQUIREMENTS OF AASHTO M-133.
2. BOLLARD SHALL BE INSTALLED IN A HOLE EXCAVATED TO A MINIMUM SIZE OF 24"X24"X30". BACKFILL AROUND BOLLARD SHALL BE COMPACTED TO 95%.

CONSTRUCTION NOTES:

A. WOOD BOLLARD; 8"X8"X5'-0".

B. SUBGRADE COMPACTED TO 95%. (SEE SECTION 301).

C. 4000 PSI STANDARD CONCRETE WALK

D. 1/2" ASPHALT IMPREGNATED EXPANSION JOINT.

CITY OF ALBUQUERQUE

LANDSCAPE
CONCRETE EDGER AT FENCE
DWG. 2725

NOV. 1990

REVISIONS
12/91
3/92

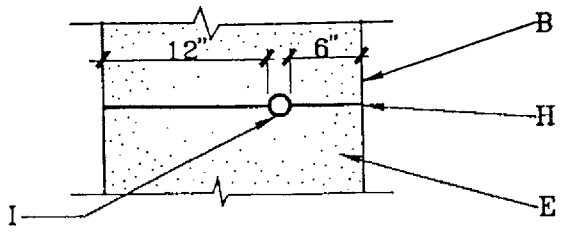

PLAN VIEW

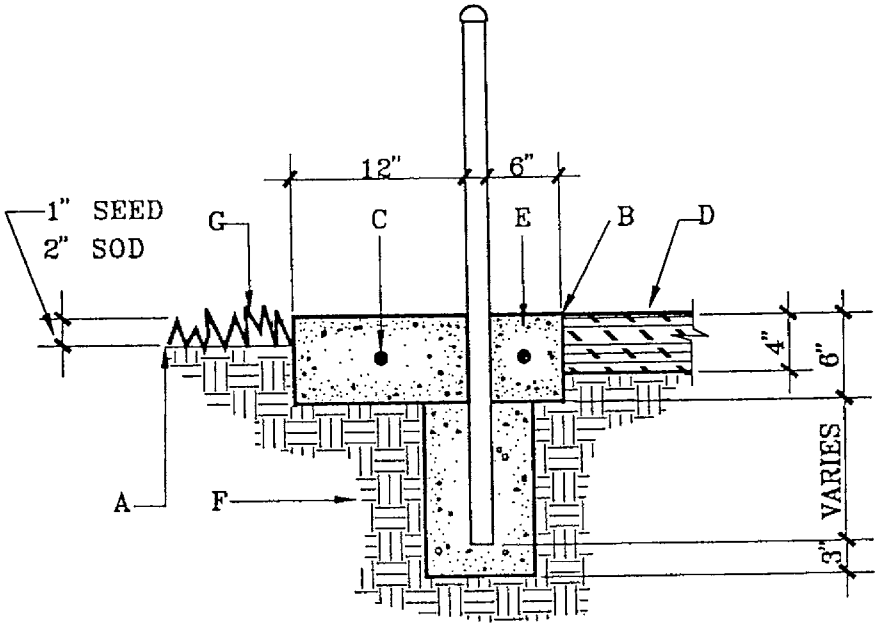

GENERAL NOTES:

1. A 12" CONCRETE EDGER SHALL BE PLACED ON THE TURF SIDE OF THE FENCE AND A 6" EDGER SHALL BE PLACED ON THE NON-TURF SIDE OF THE FENCE.
2. CONTROL JOINTS SHALL BE PLACED AT 5' O.C..
3. EXPANSION JOINTS SHALL BE PLACED AT 20' O.C., AND WHERE THE MOWSTRIP ABUTS ANOTHER HARD SURFACE.
4. TOP OF EDGER SHALL BE LEVEL WITH THE TURF AT FINISH GRADE.
5. REFERENCE THE CITY STANDARD FENCING DETAILS FOR FENCE INSTALLATION INFORMATION.

CONSTRUCTION NOTES:

A. FINISH GRADE.
B. TOOLED EDGE.
C. #3 REBAR, HORIZONTAL AND CONTINUOUS.
D. MATERIAL VARIES. (REFERENCE THE DRAWINGS).
E. 4000 PSI CONCRETE EDGER WITH BRUSH FINISH. (SEE SECTION 101).
F. 6" SUBGRADE COMPACTION. (SEE SECTION 301).
G. SOD OR SEEDED TURF. (REFERENCE THE DRAWINGS).
H. CONTROL JOINT.
I. POST.

CITY OF ALBUQUERQUE

LANDSCAPE
CONCRETE MOWSTRIP
DWG. 2726

NOV. 1990

REVISIONS
12/91
3/92

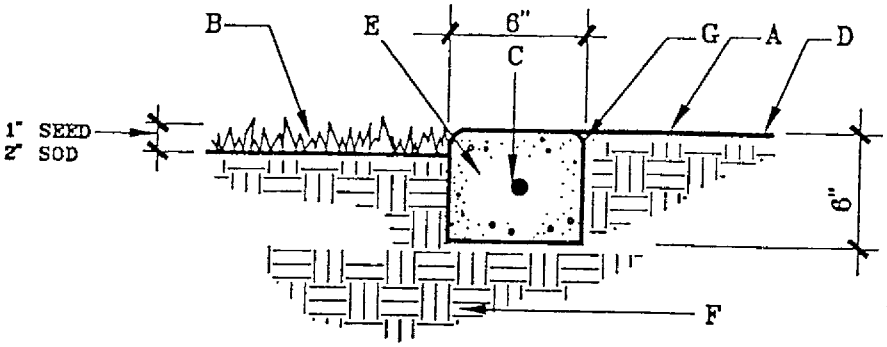

GENERAL NOTES:

1. CONTROL JOINTS SHALL BE PLACED AT 5' O.C..
2. EXPANSION JOINTS SHALL BE PLACED AT 20' O.C., AND WHERE THE MOWSTRIP ABUTS ANOTHER HARD SURFACE.
3. TOP OF MOWSTRIP SHALL BE LEVEL WITH THE FINISH GRADE.

CONSTRUCTION NOTES:

A. FINISH GRADE.
B. SOD OR SEEDED TURF (REFERENCE THE DRAWING).
C. #3 REBAR, HORIZONTAL AND CONTINUOUS.
D. MATERIAL VARIES (REFERENCE THE DRAWING).
E. 4000 PSI CONCRETE MOWSTRIP. (SEE SECTION 101).
F. SUBGRADE COMPACTED TO 95%. (SEE SECTION 301).
G. TOOLED EDGE. (TYP.)

CITY OF ALBUQUERQUE

LANDSCAPE
CONCRETE EDGER AT TREE WELL OR PLANTER
DWG. 2727
NOV.1990

REVISIONS
12/91
3/92

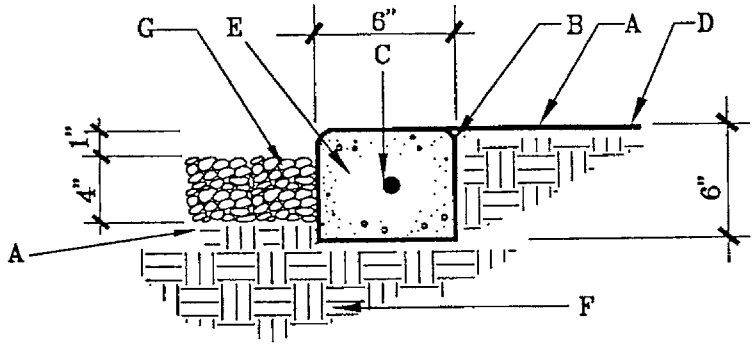

GENERAL NOTES:

1. CONTROL JOINTS SHALL BE PLACED AT 5' O.C..
2. EXPANSION JOINTS SHALL BE PLACED AT 20' O.C., AND WHERE THE EDGER ABUTS ANOTHER HARD SURFACE.
3. TOP OF EDGER SHALL BE LEVEL WITH THE FINISH GRADE OUTSIDE THE TREE WELL/PLANTER.

CONSTRUCTION NOTES:

A. FINISH GRADE AT TREE WELL OR PLANTER.

B. TOOLED EDGE. (TYP.)

C. #3 REBAR, HORIZONTAL AND CONTINUOUS.

D. MATERIAL VARIES (REFERENCE THE DRAWING).

E. 4000 PSI CONCRETE EDGER WITH BRUSH FINISH. (SEE SECTION 101).

F. SUBGRADE COMPACTED TO 95%. (SEE SECTION 301).

G. BARK MULCH.

CITY OF ALBUQUERQUE

LANDSCAPE
TURN DOWN SLAB
AT PLAY AREA
DWG. 2728

NOV. 1990

REVISIONS
12/91
3/92

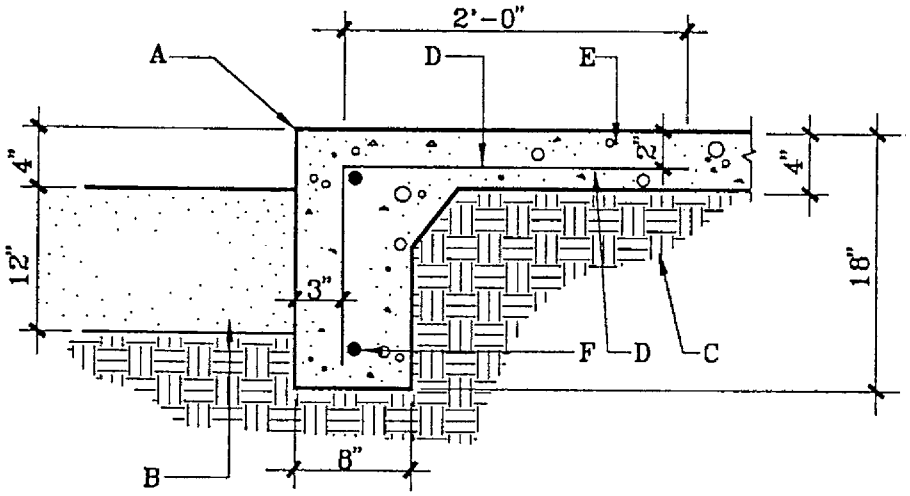

GENERAL NOTES:

1. CONTROL JOINTS SHALL BE PLACED AT 5' O.C..
2. EXPANSION JOINTS SHALL BE PLACED AT 20' O.C..

CONSTRUCTION NOTES:

A. TOOLED EDGE.

B. BRICK SAND.

C. SUBGRADE COMPACTED TO 95%. (SEE SECTION 301).

D. #4 REBAR AT 12" O.C..

E. 4000 PSI CONCRETE WITH BRUSH FINISH. (SEE SECTION 101).

F. #4 REBAR, HORIZONTAL AND CONTINUOUS.

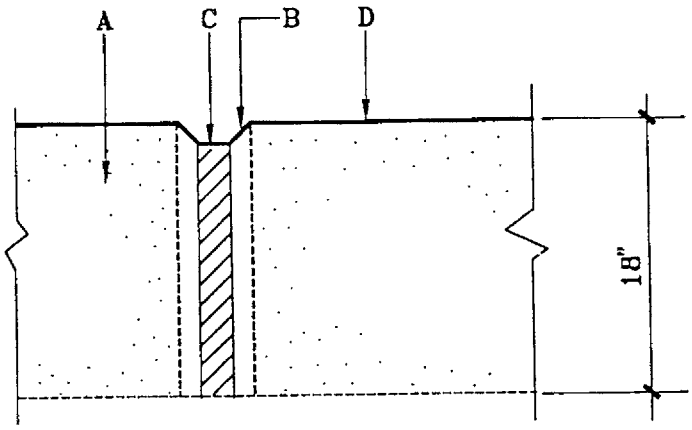

EXPANSION JOINT DETAIL

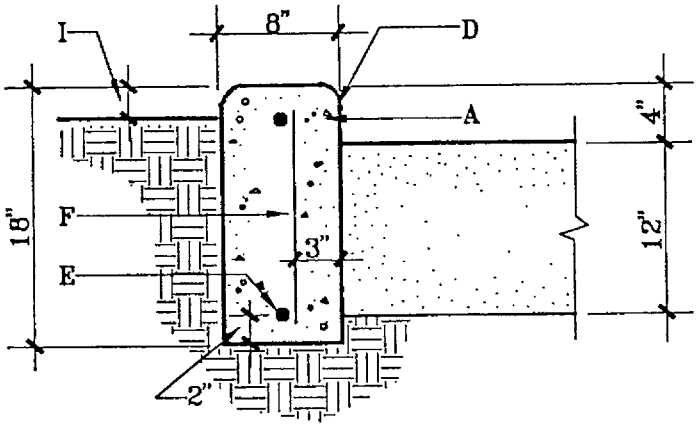

WALL DETAIL

CITY OF ALBUQUERQUE

LANDSCAPE
EDGER WALL AT
SAND PLAY AREA
DWG. 2729

NOV. 1990

REVISIONS
12/91
3/92

GENERAL NOTES:

1. CONTROL JOINTS SHALL BE PLACED AT 5' O.C..
2. EXPANSION JOINTS SHALL BE PLACED AT 20' O.C..

CONSTRUCTION NOTES:

A. 4000 PSI CONCRETE WITH BRUSH FINISH. (SEE SECTION 101).
B. 1" CHAMFER.
C. 1/2" EXPANSION JOINT MATERIAL.
D. TOOLED EDGE.
E. #4 REBAR, HORIZONTAL AND CONTINUOUS.
F. #4 REBAR AT 4' O.C..
G. BRICK SAND.
H. SUBGRADE COMPACTED TO 95%. (SEE SECTION 301).
I. MATERIAL VARIES. (REFERENCE THE DRAWINGS).

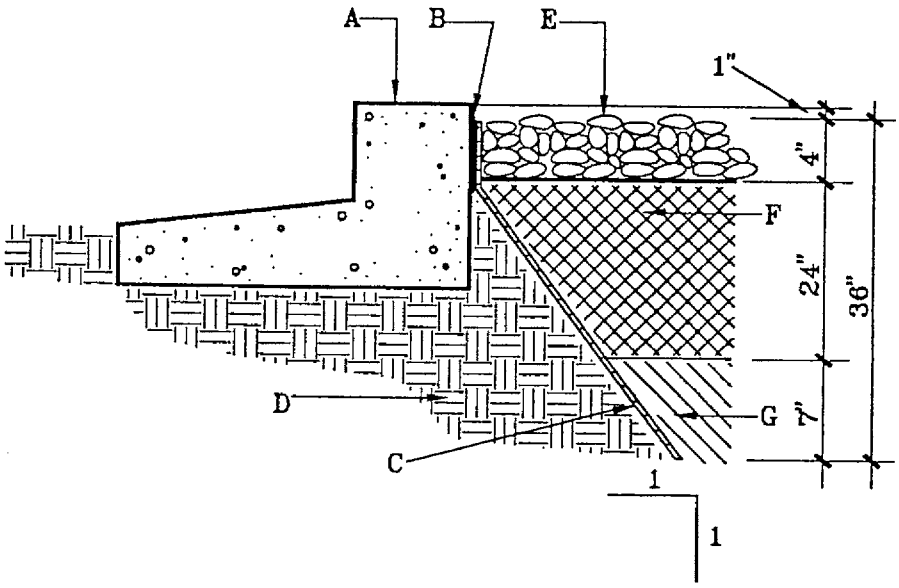

GENERAL NOTES:

1. THE WATERPROOF MEMBRANE SHALL BE A 30 MIL., PVC LINER MATERIAL.
2. THE WATERPROOF MEMBRANE SHALL BE ADHERED TO THE BACK OF THE CURB PER THE MANUFACTURER'S SPECIFICATIONS.
3. THE EXISTING SOIL WITHIN THE MEDIAN SHALL BE REMOVED AND REPLACED WITH THE SPECIFIED PLANTING SOIL MIXTURE.

CONSTRUCTION NOTES:

A. EXISTING CURB AND GUTTER.

B. ADHESIVE PER MANUFACTURER'S SPECIFICATIONS.

C. WATERPROOF MEMBRANE, 38".

D. SUBGRADE COMPACTED TO 95%. (SEE SECTION 301).

E. BARK MULCH.

F. PLANTING SOIL MIXTURE. (REFERENCE THE SPECIFICATIONS).

G. LOOSEN THE SOIL TO A DEPTH OF 6".

CITY OF ALBUQUERQUE

LANDSCAPE
MEDIAN PLANTER W/
ROADBED WATERPROOFING
DWG. 2930
NOV. 1990

REVISIONS
12/91