SECTION 2600

NMSHD STANDARD DRAWINGS

DWG. NO.	TITLE
2601	METAL RAILING TYPE A
2602	METAL RAILING TYPE B
2603	METAL RAILING TYPE C
2604	METAL RAILING TYPE D
2610	METAL BARRIER MATERIALS & PLACEMENT PROCEDURES
2615	METAL BARRIER DETAIL TYPE A END ANCHORAGE
2620	THRIE BEAM METAL BARRIER OVER CBC & UNDERPASSES
2625	METAL BARRIER THRIE BEAM ROADSIDE & BOX CULVERT
2626	SPECIAL METAL BARRIER TRANSITION DETAILS
2630	METAL BARRIER AT BRIDGE APPROACHES
2631	APPROACH SLOPE PREPARATION FOR METAL BARRIER
2635	METAL BARRIER(BREAKAWAY) TYPE "C" END ANCHORAGE (WOOD POSTS)
2636	METAL BARRIER(BREAKAWAY TYPE "C" END ANCHORAGE (STEEL POSTS)
2637	METAL BARRIER(BREAKAWAY TYPE "C" END ANCHORAGE STEEL POSTS(SOIL PLATE)

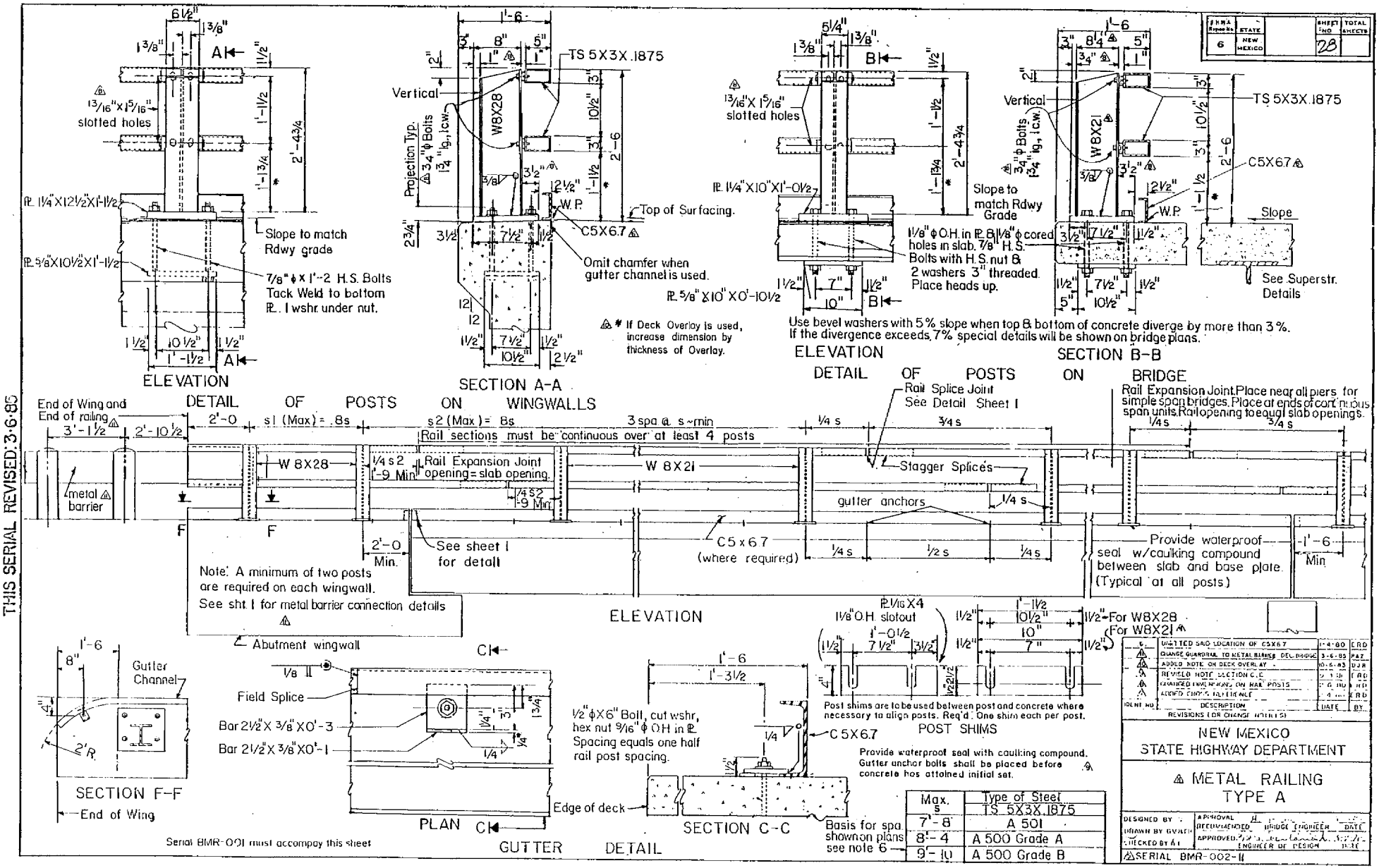

Max. s	Type of Steel
7'-8"	TS 5X3X.1875
8'-4"	A 501
9'-10"	A 500 Grade A
	A 500 Grade B

CITY OF ALBUQUERQUE DWG. 2601

FED. ROAD REGION NO.	STATE		SHEET NO.	TOTAL SHEETS
6	NEW MEXICO		29	-

Note: Use bevel washers with 5% slope when top and bottom of concrete diverge by more than 3%. If the divergence exceeds 7%, special details will be shown on bridge plans.

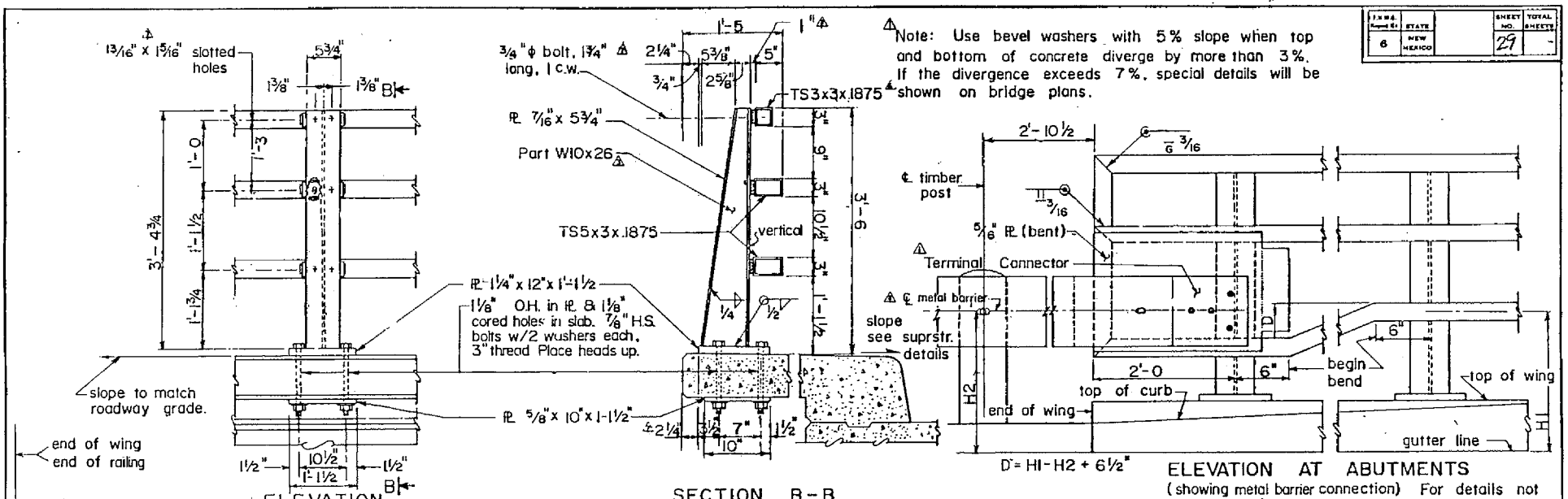

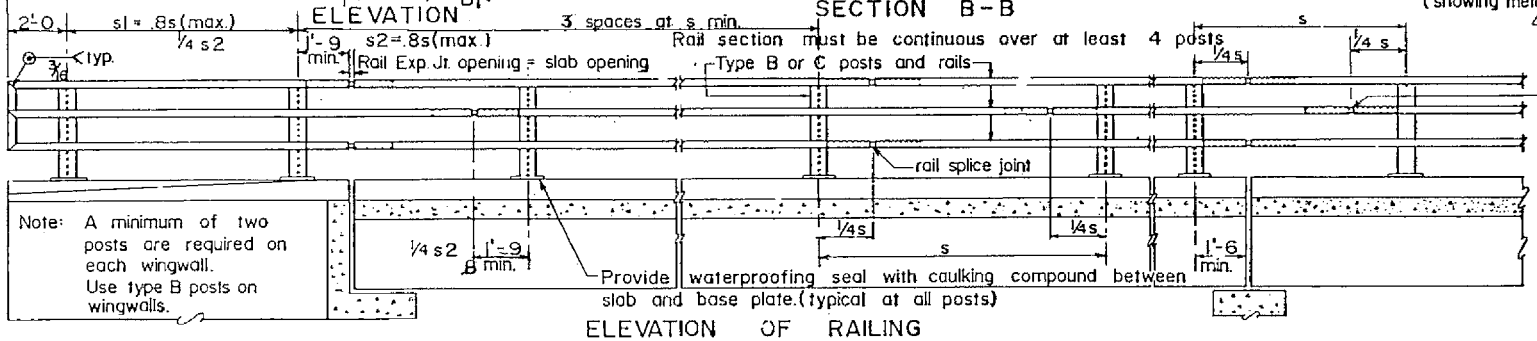

Rail expansion joint. Place near all piers in simple span bridges. Place at ends of continuous span units.

Note: A minimum of two posts are required on each wingwall. Use type B posts on wingwalls.

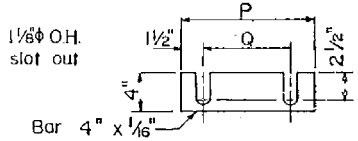

POST SHIMS ~ TYPE B RAIL

P = 1'-1 1/2 & 1'-0 ~ Q = 10 1/2 & 7. One shim P = 1'-1 1/2 & one shim P = 1'-0 for each Type B rail post. Post shims are to be used between post and concrete where necessary.

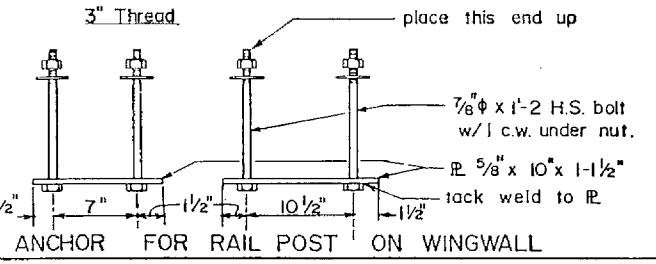

ANCHOR FOR RAIL POST ON WINGWALL

* Basis for spacing shown on plans. See note 5.

Max. S	Type of Steel TS5 x 3 x .1875	ASTM Desig. TS3 x 3 x .1875
7'-8	A501	A500 or A501
8'-4	A500 Grade A	A500 or A501
9'-10*	A500 Grade B	A500 or A501

Serial BMR-001 must accompany this sheet.

THIS SERIAL REVISED: 3-6-85

LICENSE NO.	DESCRIPTION	DATE	BY
	UPDATE TUBE SIZE	3-13-08	E.R.D.
	ADDED CROSS REFERENCE	2-4-00	E.R.D.
	CHANGED SERIAL DESIGNATION	10-26-78	E.R.D.
	UPDATE POST SIZES	7-12-78	J.S.K.
	CHANGE GUARDRAIL TO METAL BARRIER DEL BRIDGE	3-6-85	F.A.Z.
	REVISE DIMENSIONS	3-13-81	E.R.D.

REVISIONS (OR CHANGE NOTICES)

NEW MEXICO
STATE HIGHWAY DEPARTMENT

METAL RAILING
TYPE B

DESIGNED BY ...
DRAWN BY G.V.
CHECKED BY ...

APPROVAL
RECOMMENDED BRIDGE ENGINEER DATE
APPROVED ENGINEER OF DESIGN DATE 3-5-78

SERIAL BMR-003-08

CITY OF ALBUQUERQUE DWG. 2602

F.H.W.A. Region No.	STATE		SHEET NO	TOTAL SHEETS
8	NEW MEXICO		30	-

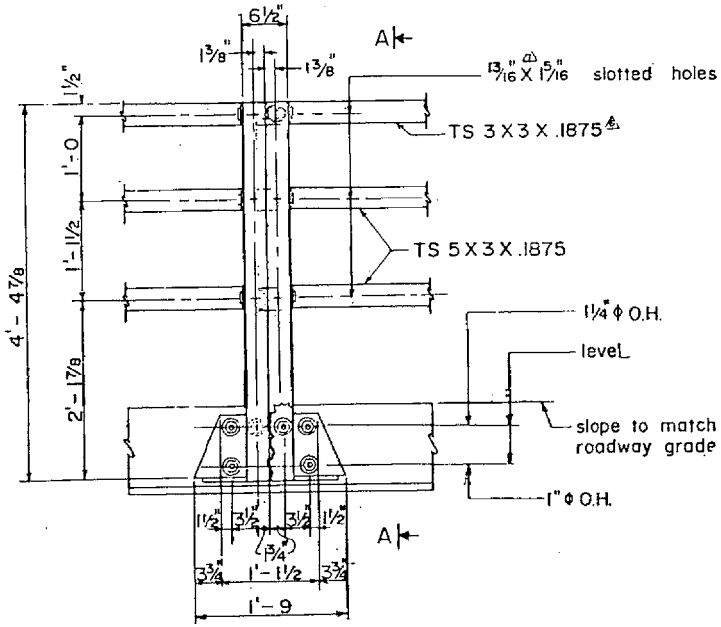

ELEVATION

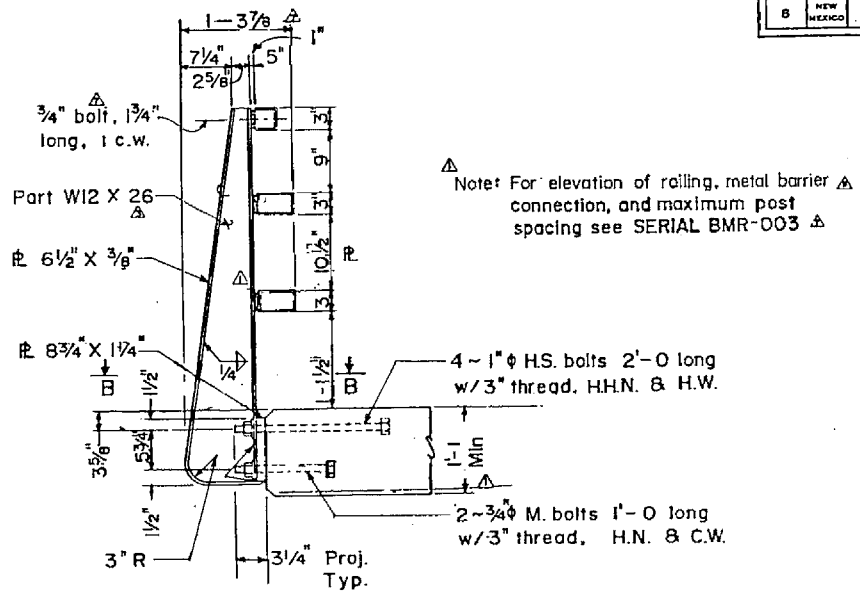

Note: For elevation of railing, metal barrier connection, and maximum post spacing see SERIAL BMR-003

SECTION A-A

TYPE C RAIL

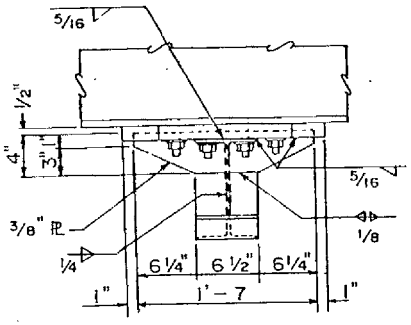

SECTION B-B

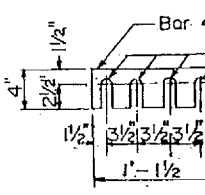

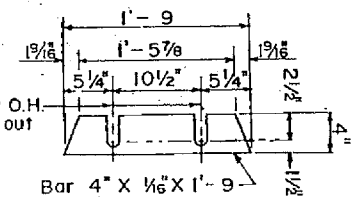

POST SHIMS

Required: One of each per post, where necessary to achieve vertical and longitudinal alignment.

Serial BMR-001 must accompany this sheet.

THIS SERIAL REVISED: 3-6-85

IDENT NO.	DESCRIPTION	DATE	BY
5	UPDATE TUBE SIZE	3-16-81	E.R.D.
4	ADDED CROSS REFERENCE	2-4-80	E.R.D.
3	CHANGED SERIAL DESIGNATION	10-26-79	E.R.D.
2	UPDATE POST SIZES	7-12-78	J.A.H.
1	CHANGE GUARDRAIL TO METAL BARRIER, DEL. BRIDGE	3-6-85	P.A.Z.
1	REVISE NOTE & DIMENSIONS	3-16-81	E.R.D.

REVISIONS (OR CHANGE NOTICES)

NEW MEXICO
STATE HIGHWAY DEPARTMENT

METAL RAILING
TYPE C

DESIGNED BY
DRAWN BY G.V.
CHECKED BY

APPROVAL
RECOMMENDED — BRIDGE ENGINEER DATE
APPROVED — ENGINEER OF DESIGN DATE 3-5-85

SERIAL BMR-004-08

CITY OF ALBUQUERQUE DWG. 2603

FHWA Report No.	STATE	SHEET NO.	TOTAL SHEETS
6	NEW MEXICO	31	

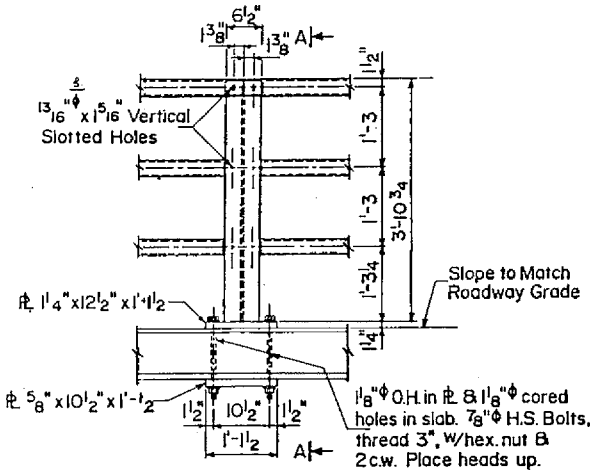

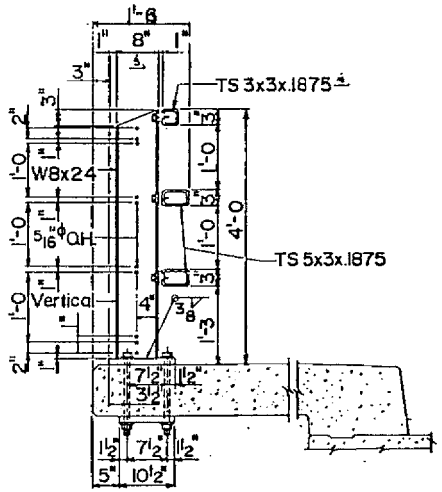

Use beveled washers with 5% slope when top & bottom of concrete diverge by more than 3%. If the divergence exceeds 9% special details will be shown on the bridge plans.

ELEVATION

SECTION A-A

DETAILS OF POSTS ON SUPERSTRUCTURE

Details for posts on wingwalls are identical except W8x28 shall be used in place of W8x24 and anchors are to be embeded in wingwall concrete.

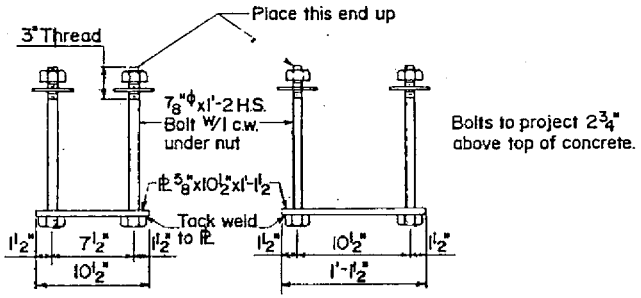

ANCHOR FOR RAIL POST ON WINGWALL

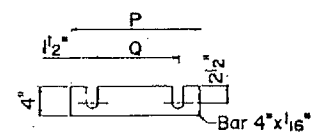

P = 1'-1½ & 1'-0½ ~ Q = 10½" & 7½". One shim P = 1'-1½ & one shim P = 1'-0½ for each Type D rail post required. Post shims are to be used between post and concrete where neccessary.

POST SHIMS ~ TYPE D RAIL

Notes: See sheet 3 of 5 for details of 'Elevation At Abutments', 'Elevation of Railing' and 'Spacing of Rail Posts'.

For General Notes and details not shown on this sheet, see sheet 1 of 5.

△ Tension wires to be #7 ga. galvanized coil spring wire.

△ Fabric is to be attached to tension wires with #11 ga. galvanized hog rings spaced 24" o.c.

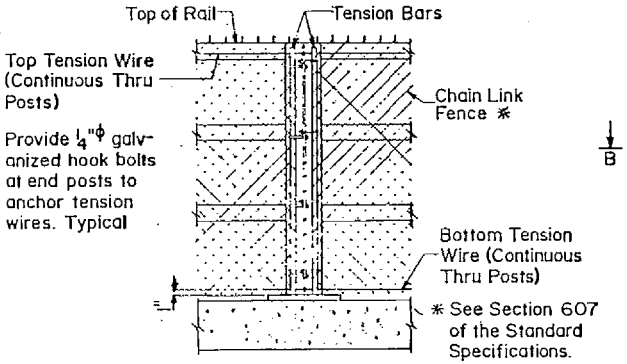

SECTION B-B

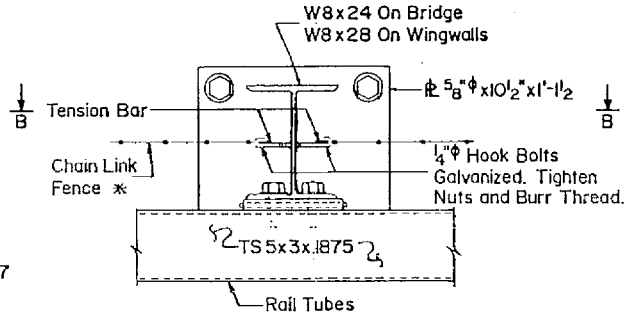

TRANSVERSE SECTION THRU POST

DETAILS FOR ATTACHING CHAIN LINK FENCE

Serial BMR-001 must accompany this sheet.

THIS SERIAL REVISED: 3-6-85

IDENT NO	DESCRIPTION	DATE	BY
6	DELETE WORD BRIDGE FROM TITLE	3-6-85	PAZ
5	REVISE DIMENSIONS	3-13-81	E.R.D
4	UPDATE TUBE SIZE	3-13-81	E.R.D
3	ADDED CROSS REFERENCE	2-4-80	E.R.D
2	ADDED NOTES	10/26/79	E.R.D
	CHANGED SERIAL DESIGNATION	10/26/79	E.R.D

REVISIONS (OR CHANGE NOTICES)

NEW MEXICO
STATE HIGHWAY DEPARTMENT

△ METAL RAILING
TYPE D

DESIGNED BY JAH
DRAWN BY AJS
CHECKED BY ERD

APPROVAL RECOMMENDED BRIDGE ENGINEER DATE
APPROVED DIRECTOR PROJ DEVELOPMENT DIVISION DATE

△ SERIAL BMR-005-06

CITY OF ALBUQUERQUE DWG. 2604

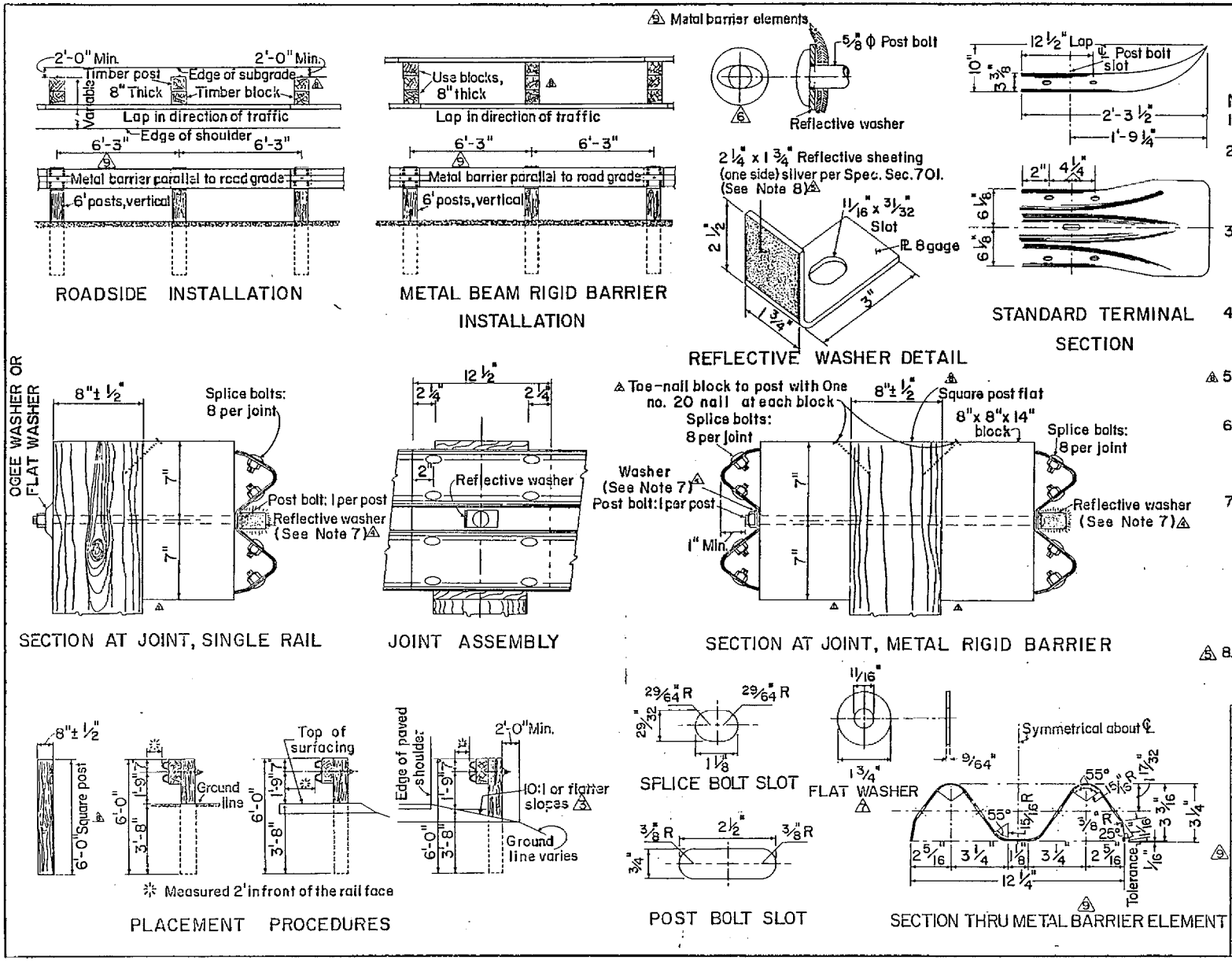

F.H.W.A. Region No.	STATE		SHEET NO.	TOTAL SHEETS
6	NEW MEXICO			

NOTES

1. Top of posts shall be flat.
2. Unless otherwise provided, rail elements and terminal sections shall be .105 inch thick. Rail elements may be furnished in 12 1/2 ft. or 25 ft. lengths.
3. Where the radius of curved alignment is 150 ft. or less, the individual railing sections shall be shop-formed by the manufacturer to fit the curvature.
4. Timber blocks to be 8" x 8" x 14" high, except where otherwise noted. Blocks and posts may be rough or S4S.
5. Contractor to use 8" square post.
6. Rail element shall conform to AASHTO Spec M180, Class A, Type I., unless otherwise specified.
7. Reflective washers shall be placed facing approaching traffic at 25 ft intervals on one-way and divided roadways. On two-way roadways, reflective washers shall be placed at 12 1/2 ft. intervals with every 2nd washer facing opposing traffic. Rectangular flat washers to be placed at all other post bolts.
8. Amber reflective washers in lieu of silver shall be used when the metal barrier is on the left side to approaching traffic on multi-lane facilities.

IDENT NO.	DESCRIPTION	DATE	BY
	CHANGED GUARDRAIL TO METAL BARRIER	2-1-85	DRR
	Added flat washer. Revised flat washer (Fig. 1)	2-1-85	FWL
	ADDED NOTE 8 – ADDED NEW BOLT FIGURE (post bolt)	5-8-76	JR
	REVISED SLOPES – ADDED NOTE 7	8-29-77	JR
	REMOVED LOWER RAILS – REVISED NAILING NOTE	8/2/77	TGM

REVISIONS (OR CHANGE NOTICES)

NEW MEXICO
STATE HIGHWAY DEPARTMENT

METAL BARRIER MATERIALS AND PLACEMENT PROCEDURES

DESIGNED BY L.A.L.
DRAWN BY J.L.M.
CHECKED BY L.A.L.

APPROVAL G. Parker Bell 2-4-76
RECOMMENDED – TRAFFIC ENGINEER DATE
APPROVED [signature] 2-4-76
ENGINEER/OF DESIGN DATE

SERIAL M-21-62 SHEET 1 OF 1

THIS SERIAL REVISED: 11-14-83

CITY OF ALBUQUERQUE DWG. 2610

F.H.W.A. Region No.	STATE		SHEET NO.	TOTAL SHEETS
6	NEW MEXICO			

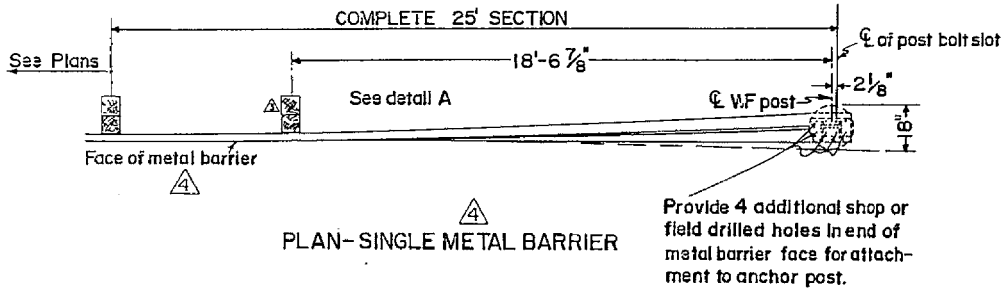

PLAN- SINGLE METAL BARRIER

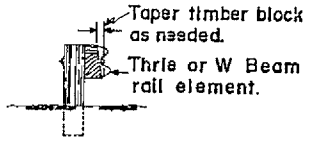

DETAIL A

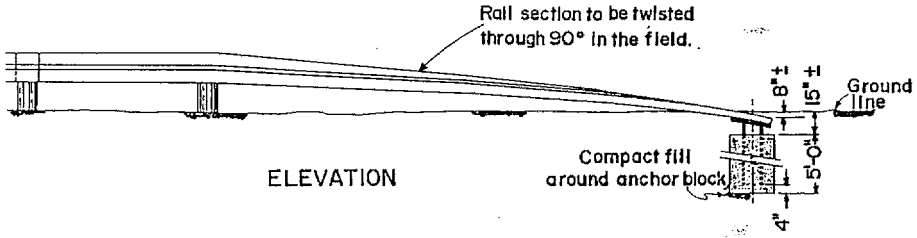

ELEVATION

NOTES:

1. Materials and workmanship shall conform to New Mexico State Highway Department Specifications.
2. Structural steel items in anchor system shall be equal to AASHTO designation M-183.
3. Bolts, nuts, washers, anchor posts and other fittings shall be galvanized steel, in accordance with AASHTO designation M-232, except where otherwise specified.
4. For additional metal barrier details, see New Mexico Standard M-21-62 and M-21-75.
5. Class "A" Concrete required for anchors.

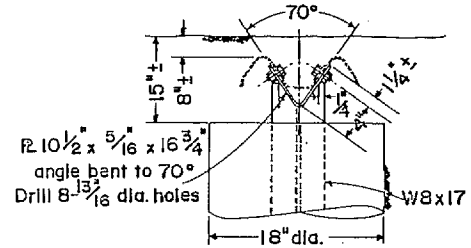

DETAIL-TYPE A ANCHORAGE

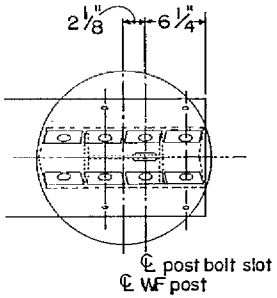

PLAN-TYPE A ANCHORAGE

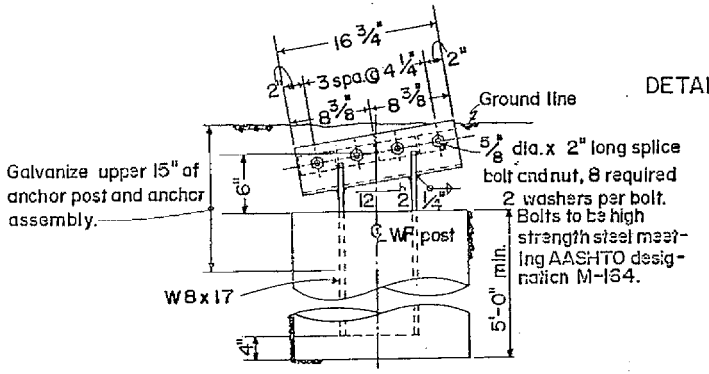

DETAIL-TYPE A ANCHORAGE

THIS SERIAL REVISED: 2-4-85

IDENT. NO.	DESCRIPTION	DATE	BY
5			
4	CHANGED GUARDRAIL TO METAL BARRIER	2/4/85	DRR
3	REPLACED ROUND POSTS WITH SQUARE POSTS	11/17/83	P.L.
2	MINOR CLARIFICATIONS	5/26/81	J.R.
1	REDRAFTED SERIAL - DELETED METAL-BEAM RIGID BARRIER DETAILS	5/26/81	J.R.

REVISIONS (OR CHANGE NOTICES)

NEW MEXICO
STATE HIGHWAY DEPARTMENT

4

METAL BARRIER DETAIL
TYPE A END ANCHORAGE

DESIGNED BY J.R.	APPROVAL	7/13/11
DRAWN BY G.O.	RECOMMENDED - TRAFFIC ENGINEER	DATE
CHECKED BY J.R.	APPROVED	7/14/11
	DIR. PROJ. DEV. DIVISION	DATE

SERIAL M-21-65A SHEET 1 OF 1

CITY OF ALBUQUERQUE DWG. 2615

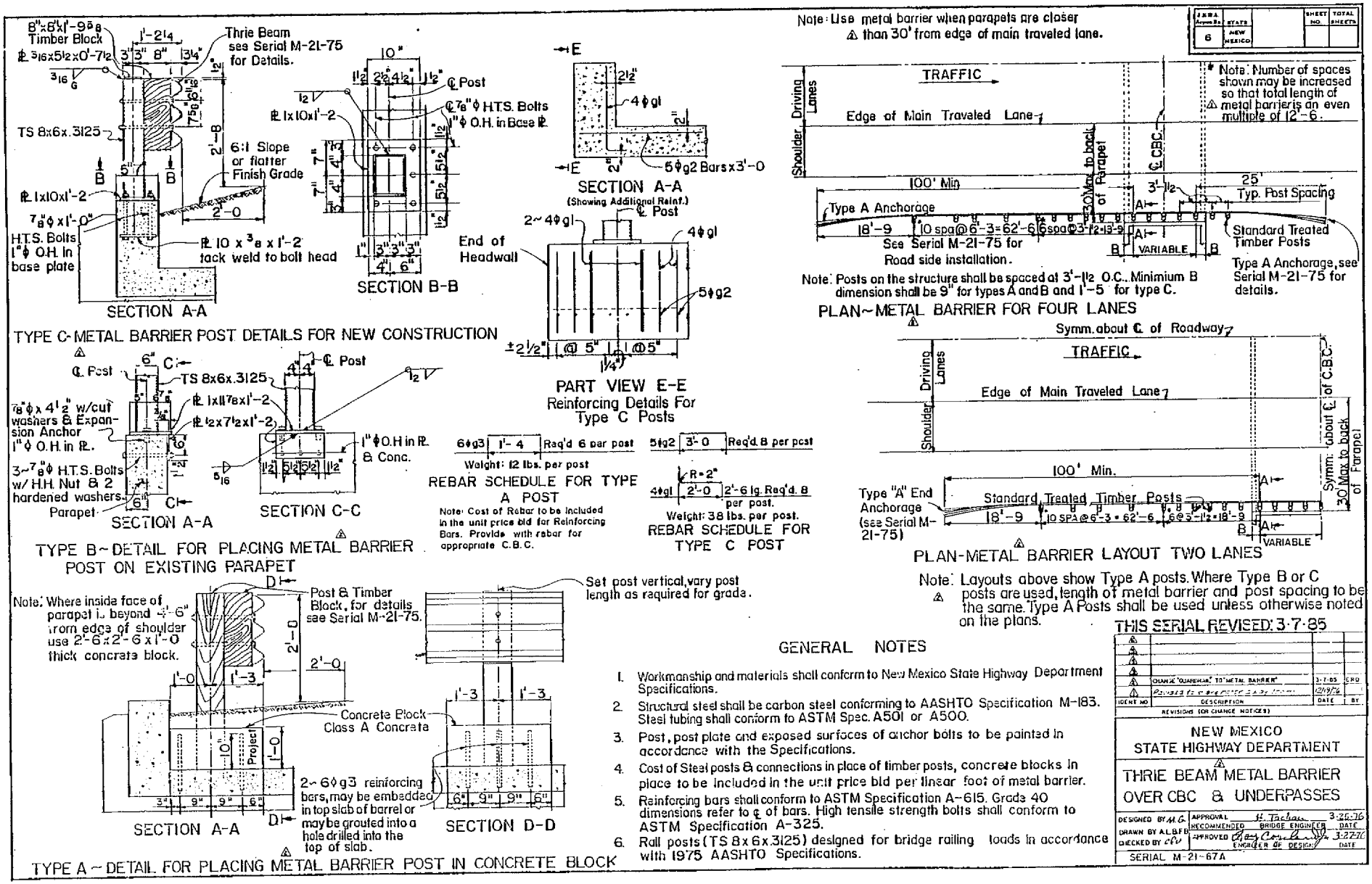

CITY OF ALBUQUERQUE DWG. 2620

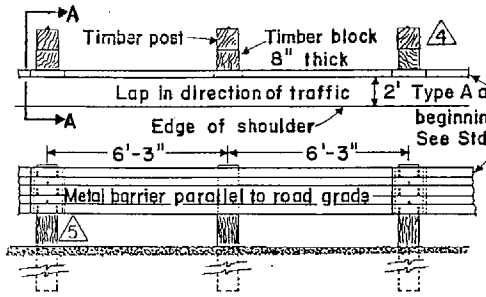

ROADSIDE INSTALLATION

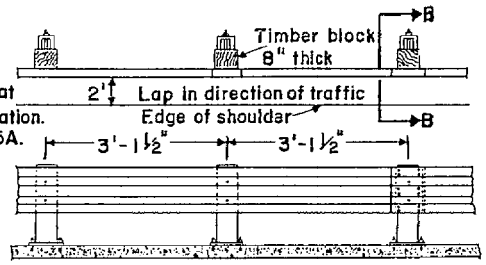

BOX CULVERT INSTALLATION
(See note 9)

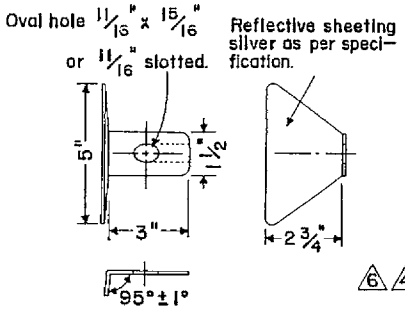

ALTERNATE REFLECTIVE WASHER DETAIL

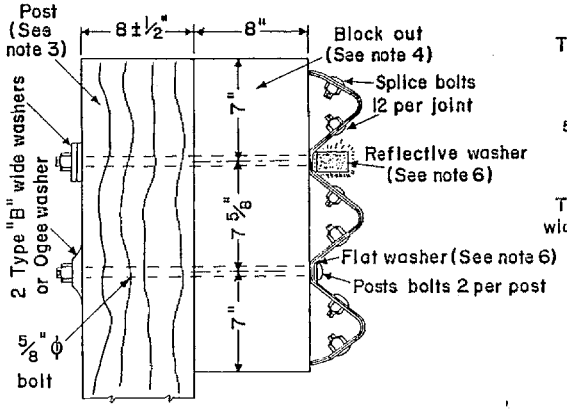

ROADSIDE SECTION AT JOINT

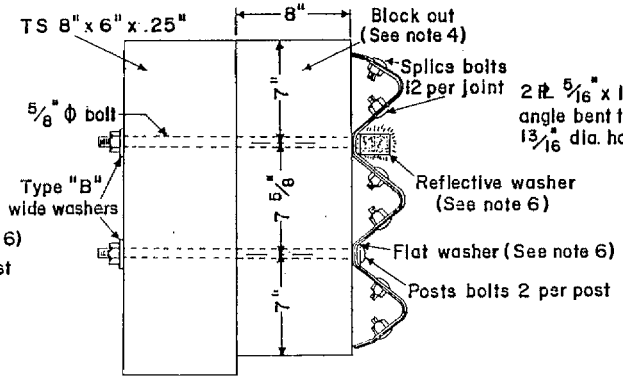

BOX CULVERT SECTION AT JOINT

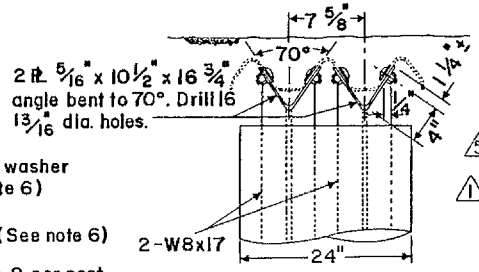

THRIE BEAM
DETAILS OF TYPE A ANCHOR
(See note 7)

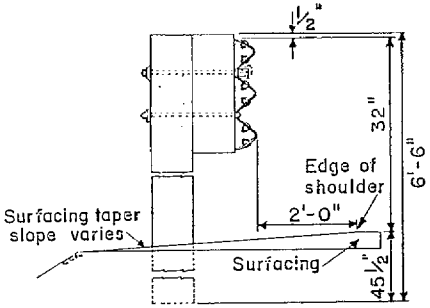

SECTION A-A

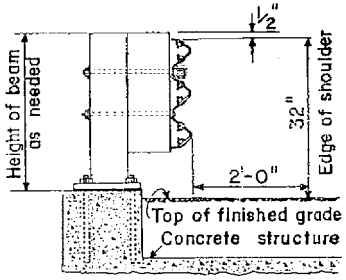

SECTION B-B

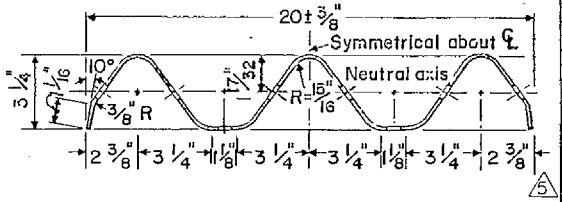

SECTION THRU RAIL ELEMENT

F.H.W.A. Action No.	STATE		SHEET NO.	TOTAL SHEETS
6	NEW MEXICO			

NOTES

1. All material and workmanship shall be done in accordance to the N.M. State Highway Department Specifications.
2. Unless otherwise provided, rail elements shall be .105 inches thick. Rail elements may be furnished in 12-½ ft. or 25 ft. lengths.
3. 6 4 Contractor to use 8"x8"x6' 6" rough post or surfaced on four sides (S4S), W6x8.5x6' 6" steel post or W6x9.0x 6' 6" steel post.
4. 6 Timber blocks shall be 8"x8"x1' 9⅝" high. Blocks may rough or (S4S). Steel block shall W6x8.5x1' 9.5" or W6x9x1' 9.5".
5. Timber posts and blocks are to be treated as specified.
6. Reflective washers as per this sheet or standard M-21-62 shall be placed every 25 ft. on upper bolt slot of metal 5 barrier elements. Flat washers to be placed at all other bolt slots.
7. 1 For additional details see standards M-21-62, M-21-77, M-21-65A.
8. Rail elements shall be steel conforming to the requirements of AASHTO M180, Class A, Type I, except as shown otherwise on this sheet.
9. For Box Culvert installation see standard M-21-67A.
10. 2 When steel posts and steel blocks are used, a 1 foot rail section must be placed behind rail elements at intermediate posts (non-splice-posts).

THIS SERIAL REVISED: 3-21-85

IDENT NO.	DESCRIPTION	DATE	BY
4	ADDED TO NOTES 3 & 4	3-21-85	DRR
3	CHANGED GUARDRAIL TO METAL BARRIER	2-4-85	DRR
2	Changed round posts to square posts Revised note 3	11-19-83	PWL
1	CHANGED SHEET 1 OF 1 TO 1 OF 2	9-20-83	CVT
2	ADDED NOTE 10.	11/15/78	JR
1	REVISED NOTE 7.	12/28/77	JR

REVISIONS (OR CHANGE NOTICES)

NEW MEXICO
STATE HIGHWAY DEPARTMENT

METAL BARRIER THRIE BEAM
ROADSIDE AND BOX CULVERT

DESIGNED BY L.A.L.
DRAWN BY J.L.M.
CHECKED BY L.A.L.
APPROVAL RECOMMENDED — TRAFFIC ENGINEER 7-13-78 DATE
APPROVED ENGINEER OF DESIGN 7-17-78 DATE

SERIAL M-21-75 3 SHEET 1 OF 2

CITY OF ALBUQUERQUE DWG. 2625

F.H.W.A. Reports	STATE		SHEET NO.	TOTAL SHEETS
6	NEW MEXICO			

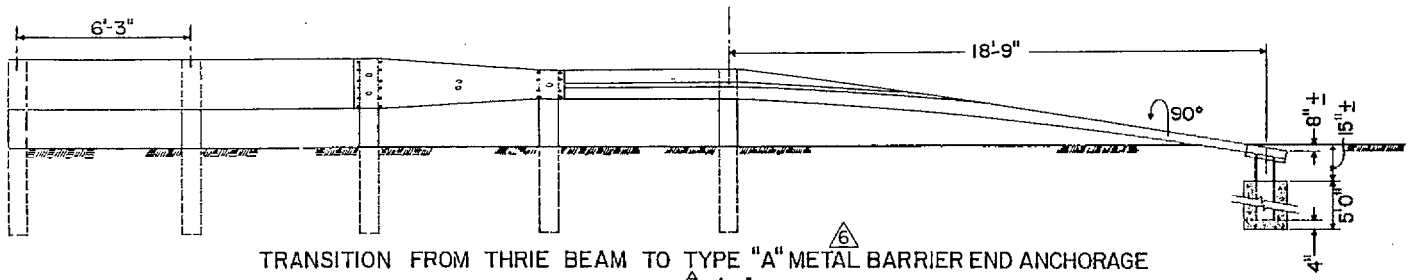

TRANSITION FROM THRIE BEAM TO TYPE "A" METAL BARRIER END ANCHORAGE

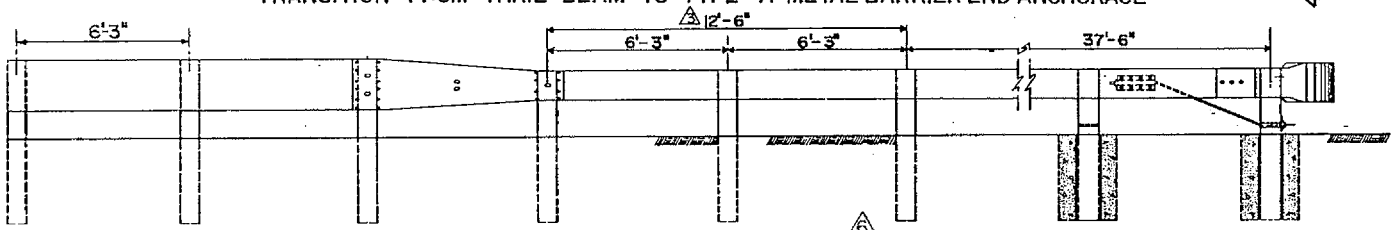

TRANSITION FROM THRIE BEAM TO TYPE "C" METAL BARRIER END ANCHORAGE

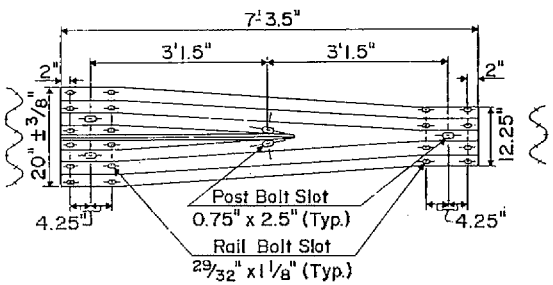

TRANSITION FROM THRIE BEAM TO W-BEAM

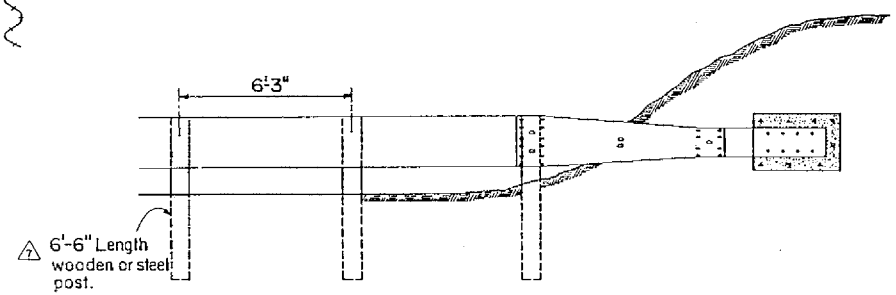

TRANSITION FROM THRIE BEAM TO TYPE "D" METAL BARRIER END ANCHORAGE

GENERAL NOTES:

1. For additional Metal Barrier End Anchorage details refer to appropriate Standard Serial M-21-65A, M-21-77C or M-21-77D.
2. Metal Barrier Transition Section shall be included in the Linear Feet of Thrie Beam metal barrier.

THIS SERIAL REVISED: 3-20-85

IDENT. NO.	DESCRIPTION	DATE	BY
5	CHANGED GUARDRAIL TO METAL BARRIER	2-4-85	DRR
6	CHANGED DRAWING TO SERIAL	9-20-83	C.V.T.
4	REVISED GENERAL NOTE No. 2	3/8/83	C.V.T.
3	ADDED 12'-6" SECTION OF GUARDRAIL	12/18/81	J.R.
2	GENERAL NOTE No. 2 ADDED	8/23/79	ADCO
a	NOTE ADDED	3/20/83	DRR

REVISIONS (OR CHANGE NOTICES)

NEW MEXICO
STATE HIGHWAY DEPARTMENT

SPECIAL METAL BARRIER TRANSITION DETAILS

DESIGNED BY
DRAWN BY J.L.B.
CHECKED BY J.R.

APPROVAL RECOMMENDED G. Robert Bolo ENGINEER 7-31-78 DATE
APPROVED Carl E. Estrada DIR PROJ DEV DIV 7-31-78 DATE

SERIAL M-21-75 SHEET 2 OF 2

1/31/78

CITY OF ALBUQUERQUE DWG. 2626

F.H.W.A. Region No	STATE		SHEET NO	TOTAL SHEETS
6	NEW MEXICO			

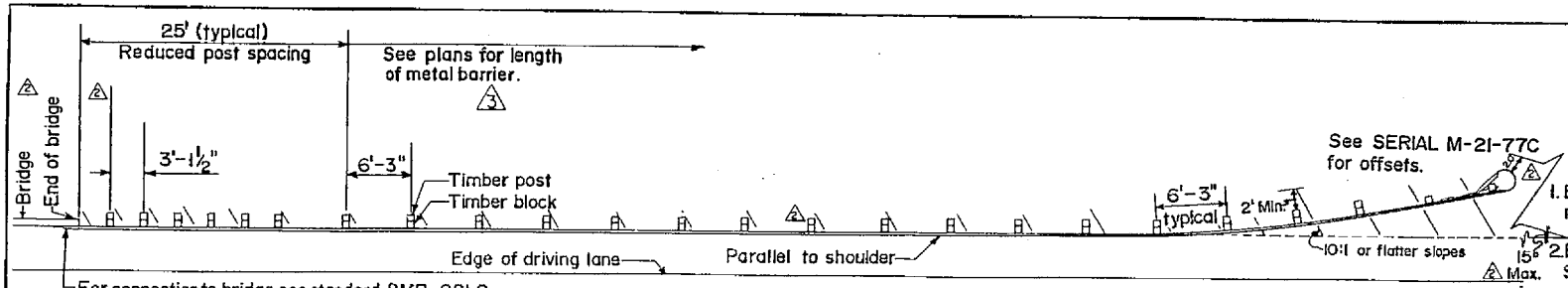

SHOULDER INSTALLATION (typical)
CASE "A"

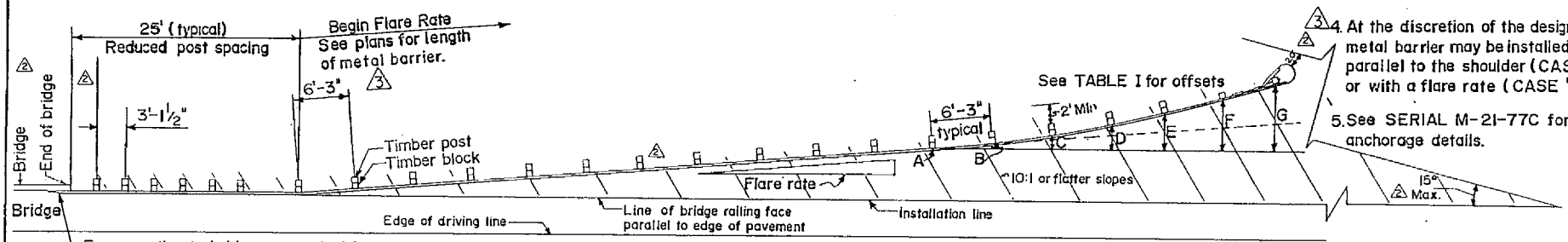

SHOULDER INSTALLATION (typical)
CASE "B"

GENERAL NOTES

1. Build metal barrier at structures when noted on plans.
2. For metal barrier details, see New Mexico Standard M-21-62.
3. For special installations, Project Engineer will determine the exact radius of rail and location of posts and notify contractor before material is fabricated.
4. At the discretion of the designer, the metal barrier may be installed parallel to the shoulder (CASE "A") or with a flare rate (CASE "B").
5. See SERIAL M-21-77C for anchorage details.

TABLE I

CASE "B" FLARE RATE	50:1	25:1
A	0.0'	0.0'
B	0.24'	0.36'
C	0.69'	0.94'
D	1.38'	1.75'
E	2.30'	2.80'
F	3.43'	4.05'
G	4.75'	5.50'

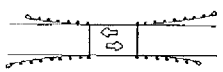

Two-Lane Highway

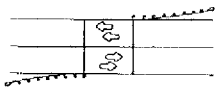

Multi-Lane Single-Structure

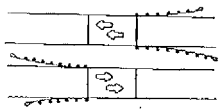

Multi-Lane Double Structure

APPLICATION

THIS SERIAL REVISED: 2-5-85

IDENT. NO.	DESCRIPTION	DATE	BY
5			
4			
3	CHANGED GUARDRAIL TO METAL BARRIER	2-5-85	JDR
2	Revise Table I, Posts And Notes	11-22-82	P.L.
1	REDREW STANDARD	1-25-82	J.R.

REVISIONS (OR CHANGE NOTICES)

NEW MEXICO
STATE HIGHWAY DEPARTMENT

METAL BARRIER AT
BRIDGE APPROACHES

DESIGNED BY J.R.
DRAWN BY G.O.
CHECKED BY

APPROVAL
RECOMMENDED — ENGINEER / DATE
APPROVED — ENGINEER OF DESIGN / DATE

SERIAL M-21-77 SHEET 1 OF 2

CITY OF ALBUQUERQUE DWG. 2630

F.A.W.A. Project No.	STATE		SHEET NO.	TOTAL SHEETS
6	NEW MEXICO			

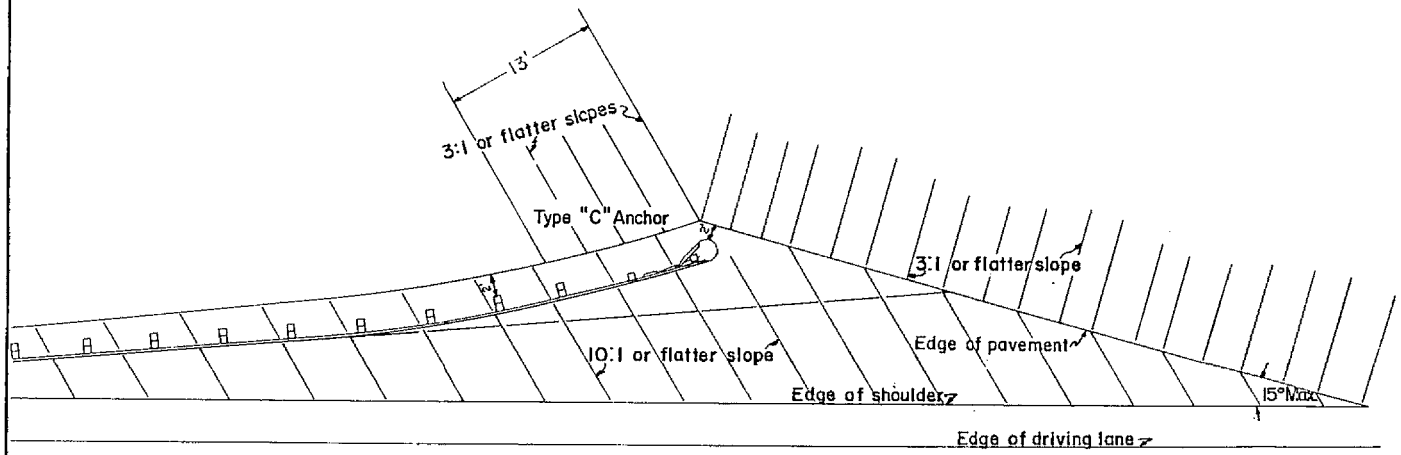

SLOPE DETAIL (2)

GENERAL NOTES

(1) 1. For additional details see Serials M-21-62, M-21-77 sheet 1 of 2 and M-21-77C.

2. The embankment material shall be compacted to 95 percent of maximum density.

3. Unless otherwise specified on the plans, the cost of the embankment material and the placing thereof shall be included in the unit bid price for metal barrier. (3)

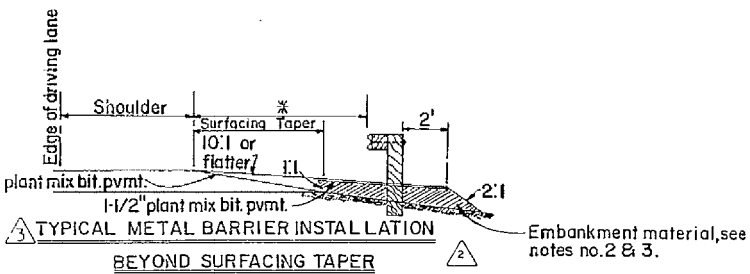

(3) TYPICAL METAL BARRIER INSTALLATION BEYOND SURFACING TAPER (2)

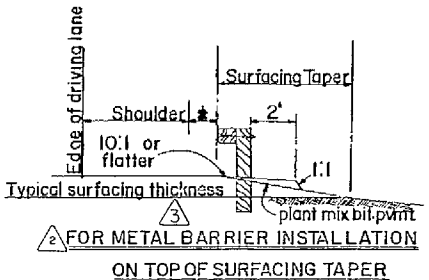

(3) (2) FOR METAL BARRIER INSTALLATION ON TOP OF SURFACING TAPER

* See plans for offset distance.

THIS SERIAL REVISED: 2-7-85

IDENT. NO.	DESCRIPTION	DATE	BY
6			
5			
4			
3	CHANGED GUARDRAIL TO METAL-BARRIER	2/7/85	DRR
2	DETAIL LABELS WERE CHANGED	3/20/84	C.V.T.
1	REVISED GENERAL NOTES	3/20/84	C.V.T.

REVISIONS (OR CHANGE NOTICES)

NEW MEXICO
STATE HIGHWAY DEPARTMENT

(3) APPROACH SLOPE PREPARATION
METAL BARRIER INSTALLATION

DESIGNED BY P.L.
DRAWN BY F.L.P.
CHECKED BY R.L.

APPROVAL RECOMMENDED — TRAFFIC ENGINEER — DATE 2/7/85
APPROVED — ENGINEER OF DESIGN — DATE

SERIAL M-21-77 SHEET 2 OF 2

CITY OF ALBUQUERQUE DWG. 2631

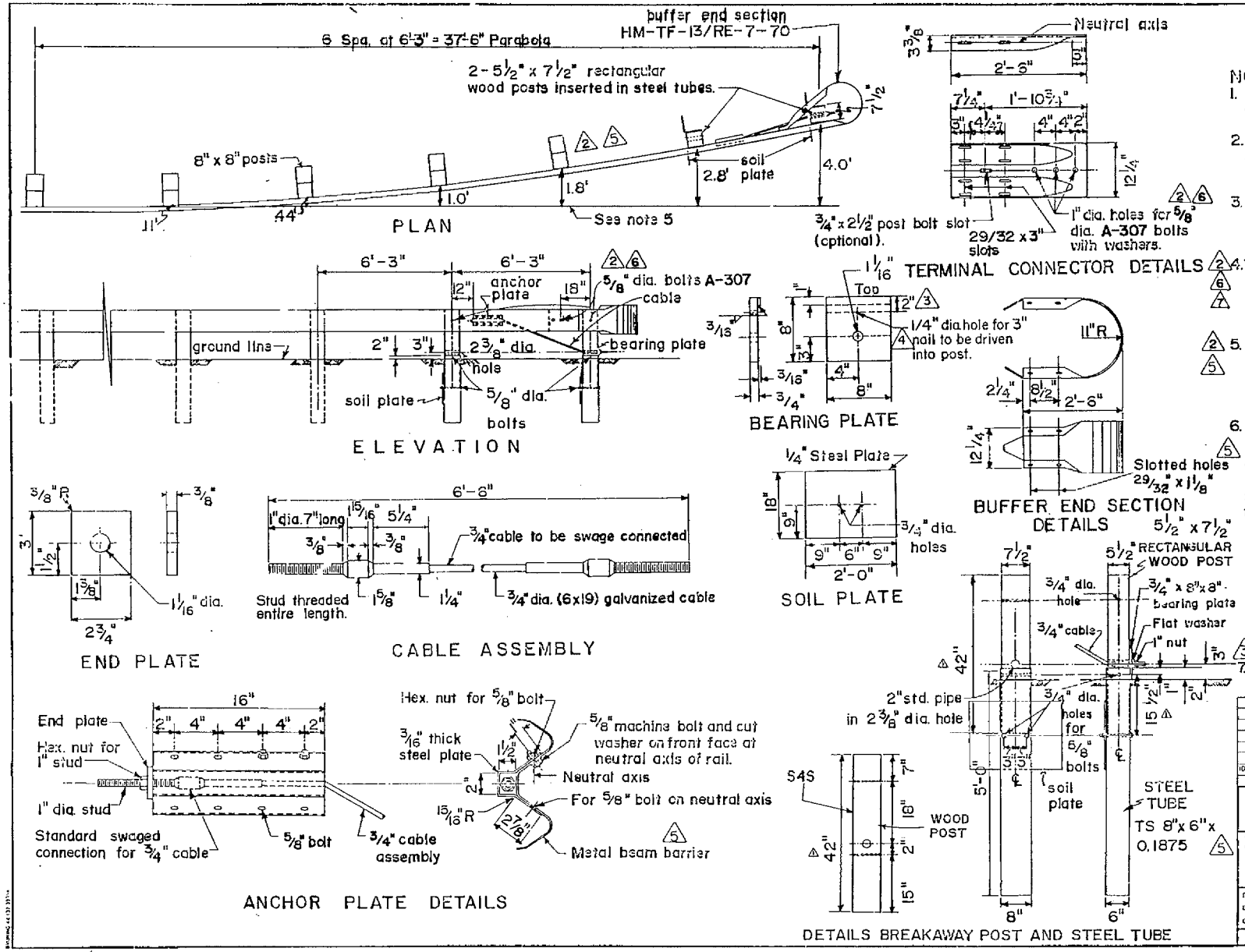

F.H.W.A. Region No.	STATE		SHEET NO.	TOTAL SHEETS
6	NEW MEXICO			

NOTES

1. Unless otherwise provided, rail elements shall be .105 inch thick.
2. Structural steel items in anchor system shall be AASHTO M-183 or equal.
3. Bolts, washers, nuts and other fittings shall be galvanized steel in accordance with ASTM A-153.
4. Washers between the mounting bolts head and W-Beam shall be **included only on the post at the buffer end section.**
5. See standard M-21-77 for offsets when metal barrier in advance of the anchorage is installed with a flare rate. (e.g. 25:1 or 50:1).
6. To provide a parabolic flare, the posts in the last 37.5' feet of metal barrier shall be completely backfilled and tamped before the w-beam rail is attached. In addition, the last two posts (steel tubes) shall be embedded by layering the backfill material in twelve-inch increments with compaction applied to each layer through the use of a pneumatic device until maximum density is achieved to the satisfaction of the engineer for the type of backfill material used.
7. Cable tension at B.C.T. shall be snug with no visible slack.

IDENT. NO	DESCRIPTION	DATE	BY
5	Changed bolt size and note 4	10-2-85	DRR
4	CHANGE GUARDRAIL TO METAL BARRIER	2-7-85	DRR
3	Changed ⅛" To ¼"	6-11-84	P.L.
2	Added note 7, Bearing plate nail note	12-9-84	P.L.
1	Revised notes 4 & 5, Posts conform A-325	11-18-83	P.L.
0	CHANGED NOTE NOTE 4, ADDED-ONLY-	1-28-86	DRR

REVISIONS (OR CHANGE NOTICES)

NEW MEXICO
STATE HIGHWAY DEPARTMENT

METAL BARRIER (BREAKAWAY) TYPE "C" END ANCHORAGE (WOOD POSTS)

DESIGNED BY J.R.
DRAWN BY G.O.
CHECKED BY J.R.
APPROVAL RECOMMENDED — ENGINEER — DATE
APPROVED — ENGINEER OF DESIGN — DATE

SERIAL M-21-77C SHEET 1 OF 3

THIS SERIAL REVISED 1-28-86

CITY OF ALBUQUERQUE DWG. 2635

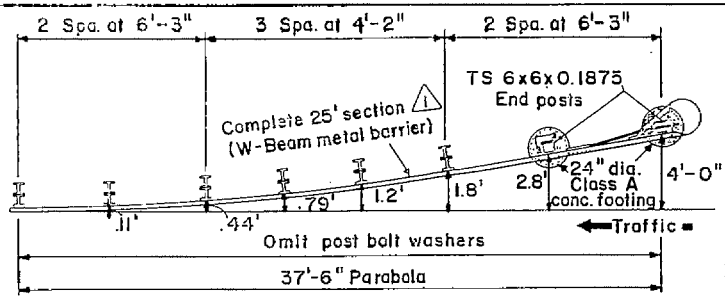

PLAN

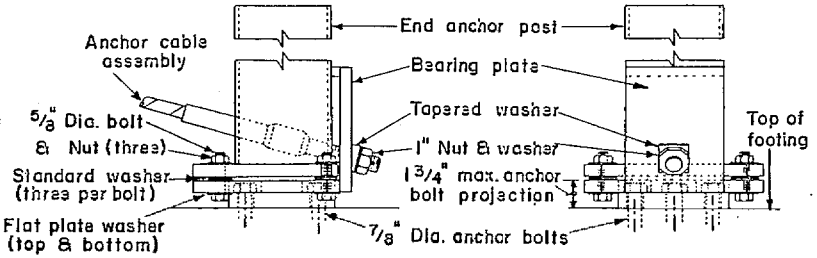

BREAKAWAY CABLE TERMINAL ASSEMBLY

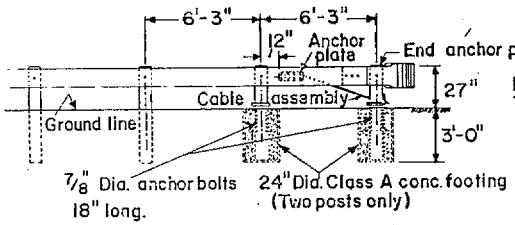

ELEVATION

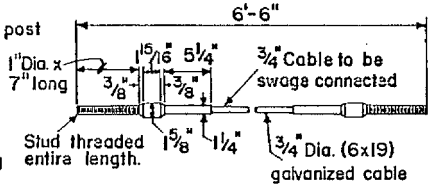

CABLE ASSEMBLY

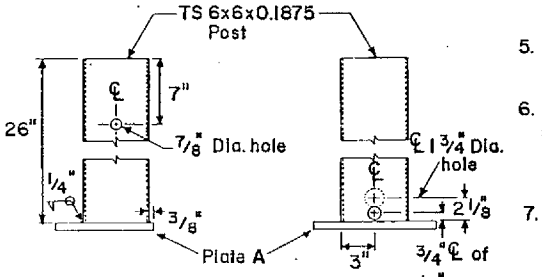

TERMINAL POST DETAIL

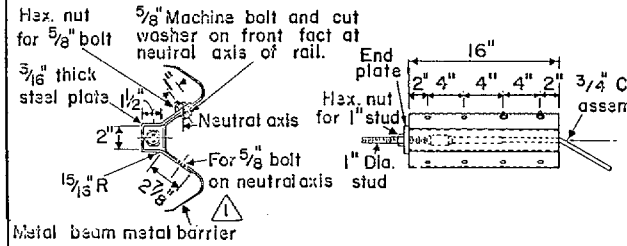

ANCHOR PLATE DETAILS

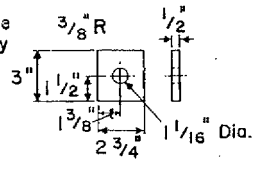

END PLATE

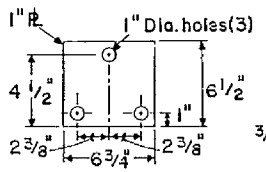

BASE PLATE C

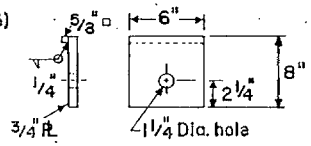

BEARING PLATE

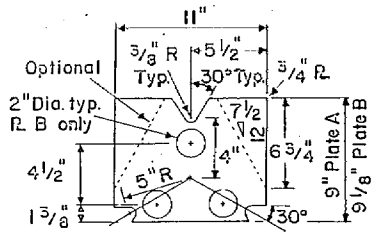

SLIP BASE PLATES A & B

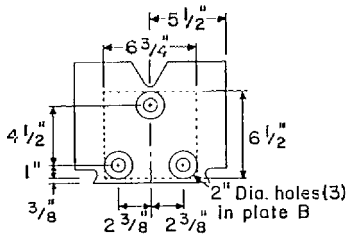

POST & PLATE FABRICATION

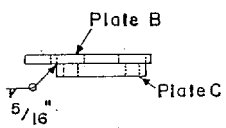

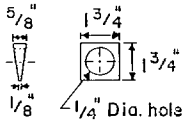

TAPERED WASHER

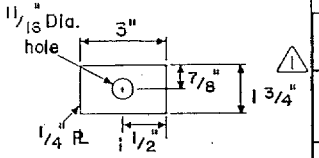

FLAT PLATE WASHER

NOTES

1. A 25' section may be be 2-12'-6" rails or 1-25' rail.
2. The second B.C.T. steel post does not require holes to accommodate anchor cable.
3. Anchor Plate may be formed in single unit or welded fabrication.
4. Anchor Cable Assembly shall conform to AASHTO M-30 with Type II wire rope.
5. Torque slip plate bolts to be 155-170 ft. lbs.
6. Anchor bolts and slip plate bolts, nuts and washers shall conform to ASTM A-325 and galvanized in accordance with ASTM A-153.
7. B.C.T. must be installed on level surface (10:1 or flatter) with metal barrier system for optimum performance.
8. Use 25 foot (Nom.) rail length in first section, use 12 inch long backup plate at posts where W-Beam splice does not occur.

FHWA Region No.	STATE		SHEET NO.	TOTAL SHEETS
6	NEW MEXICO			

THIS SERIAL REVISED: 2-6-85

IDENT. NO.	DESCRIPTION	DATE	BY
1	CHANGED GAURDRAIL TO METAL BARRIER	2-6-85	DRP

REVISIONS (OR CHANGE NOTICES)

NEW MEXICO
STATE HIGHWAY DEPARTMENT

METAL BARRIER (BREAKAWAY)
TYPE "C" END ANCHORAGE
(STEEL POSTS)

DESIGNED BY J.R.
DRAWN BY J.L.M.
CHECKED BY J.R.

APPROVAL — RECOMMENDED — TRAFFIC ENGINEER — DATE 8-14-84
APPROVED — DIR. PROJ. DEV. DIV. — DATE 2-6-85

SERIAL M-21-77C — SHEET 2 OF 3

CITY OF ALBUQUERQUE DWG. 2636

F.H.W.A. Region No	STATE		SHEET NO.	TOTAL SHEETS
6	NEW MEXICO			

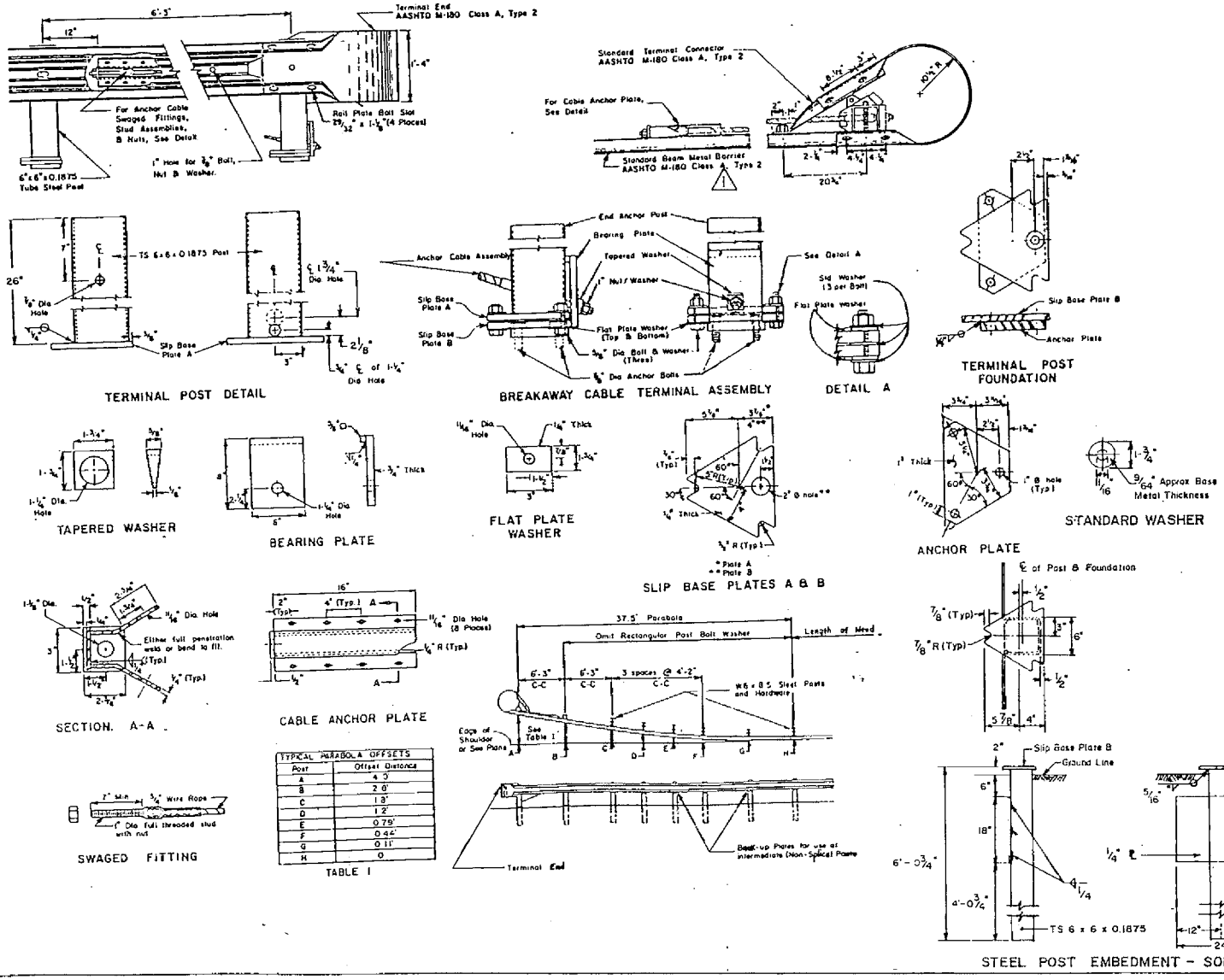

NOTES

1. A 25' section may be 2-12'-6" rails or 1-25' rail.
2. The second B.C.T. steel post does not require holes to accommodate anchor cable.
3. Anchor Plate may be formed in single unit or welded fabrication.
4. Anchor Cable Assembly shall conform to AASHTO M-30 with Type II wire rope.
5. Torque slip plate bolts to be 155-170 ft. lbs.
6. Anchor bolts and slip plate bolts, nuts and washers shall conform to ASTM A-325 and galvanized in accordance with ASTM A-153.
7. B.C.T. must be installed on level surface (10:1 or flatter) with metal barrier system for optimum performance. △1
8. Use 12 inch long backup plate at posts where W-Beam splice does not occur.
9. △1 To provide a parabolic flare, the posts in the last 37.5 feet of metal barrier shall be completly back-filled and tamped before the W-Beam rail is attached. In addition, the last two posts (steel tubes) shall be embedded by layering the back-fill material in twelve-inch increments with compaction applied to each layer through the use of a pneumatic device until maximum density is achieved to the satisfaction of the engineer for the type of backfill material used.
10. Cable tension at B.C.T. shall be snug with no visible slack.

THIS SERIAL REVISED 2-5-85

IDENT. NO	DESCRIPTION	DATE	BY
△1	CHANGED GUARDRAIL TO METAL BARRIER	2-5-85	DRF
	REVISIONS (OR CHANGE NOTICES)		

NEW MEXICO
STATE HIGHWAY DEPARTMENT

△1 METAL BARRIER (BREAKAWAY)
TYPE "C" END ANCHORAGE
STEEL POSTS (SOIL PLATE)

DESIGNED BY-G.P.B.
DRAWN BY-G.O.
CHECKED BY-G.P.B.

APPROVAL — RECOMMENDED - TRAFFIC ENGINEER — DATE 11/21/84
APPROVED — ENGINEER OF DESIGN — DATE

SERIAL M-21-77C — SHEET 3 OF 3

CITY OF ALBUQUERQUE DWG. 2637