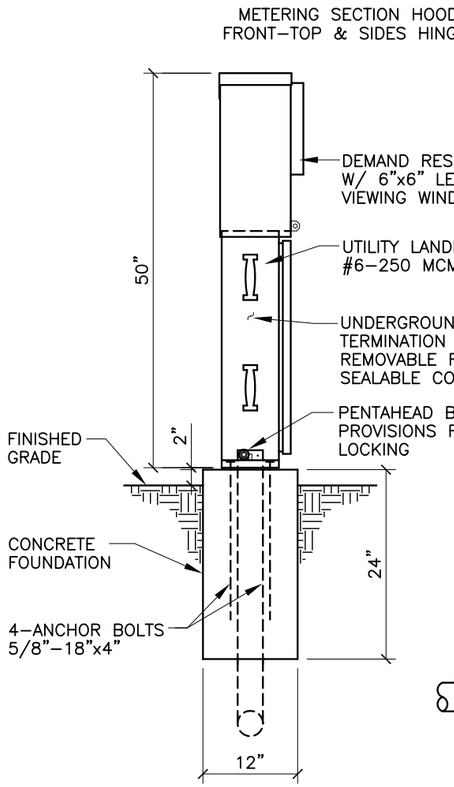

LEFT SIDE

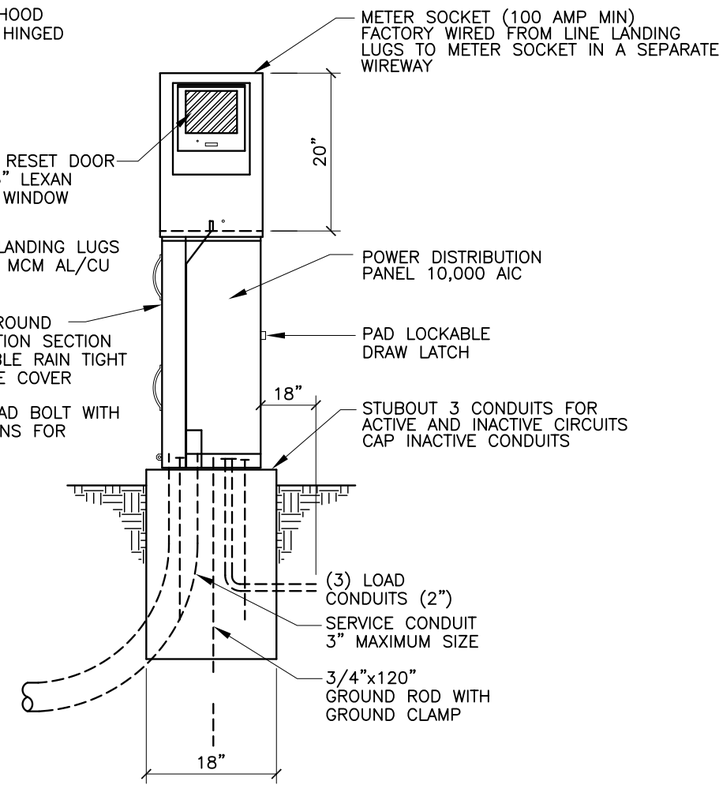

FRONT VIEW

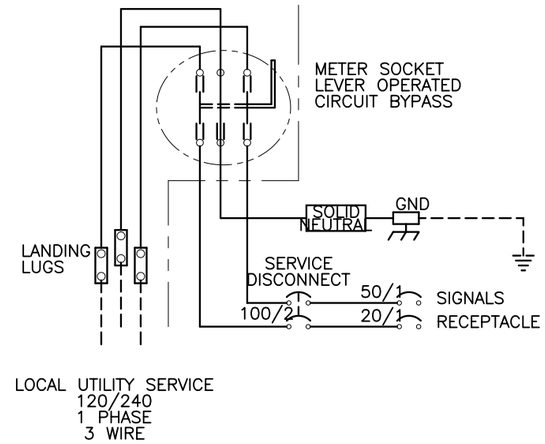

SERVICE EQUIPMENT
WIRING DIAGRAM "A"

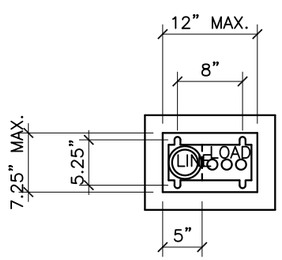

BASE PLAN

METER PEDESTAL CONSTRUCTION NOTES

1. METER PEDESTAL SHALL BE UL LISTED "INDUSTRIAL CONTROL PANEL" PER UL 508.
2. METER PEDESTAL SHALL MEET THE ELECTRIC UTILITY SERVICE EQUIPMENT REQUIREMENTS COMMITTEE (EUSERC) GUIDELINES.
3. CONSTRUCTION SHALL BE NEMA 3R AND 12, RAIN TIGHT AND DUST TIGHT. ELECTRICALLY WELDED AND REINFORCED WHERE REQUIRED.
4. ALL NUTS, BOLTS, SCREWS AND HINGES SHALL BE STAINLESS STEEL.
5. NUTS, BOLTS, AND SCREWS SHALL NOT BE VISIBLE FROM OUTSIDE OF METER PEDESTAL.
6. PHENOLIC NAME PLATES SHALL BE PROVIDED AS REQUIRED.
7. CIRCUIT BREAKERS SHALL BE CABLE IN–CABLE OUT WITH LINE ON TOP & LOAD ON THE BOTTOM. HANDLE POSITION UP="ON", MIDDLE="TRIPPED", DOWN="OFF".
8. A PLASTIC COVERED WIRING DIAGRAM SHALL BE ATTACHED TO THE INSIDE OF THE FRONT DOOR.
9. METER PEDESTAL SHALL BE FACTORY WIRED AND CONFORM TO REQUIRED NEMA STANDARDS.
10. ALL POWDER COATED METER PEDESTAL SHALL HAVE A CORROSION RESISTANT COATING WHICH INCLUDES A FIVE STEP DIP TANK METAL PREPARATION PROCESS:
    A. ALKALINE CLEANER 160° F.
    B. CLEAR WATER RINSE.
    C. IRON PHOSPHATE APPLICATION 150°.
    D. CLEAR WATER RINSE.
    E. INHIBITIVE RINSE TO SEAL PHOSPHATED SURFACES 120°.
    FINISHED WITH AN ELECTROSTATICALLY APPLIED DRY POLYESTER POWDER COATING THEN BAKED @ 380° TO CURE.
11. CONCRETE FOUNDATIONS INCLUDING EXCAVATION AND BACKFILL, CONCRETE, AND ANCHOR BOLTS, COMPLETE–IN PLACE, WILL BE CONSIDERED INCIDENTAL TO THE METER PEDESTAL.

CONSTRUCTION MATERIALS AND FINISH

- ☐ 12 GA HD GALVANIZED SHEET STEEL
  - ☐ POWDER COATED
- ☐ 14 GA #304D STAINLESS STEEL SHEET
  - ☐ POWDER COATED COLOR:
  - ☐ NATURAL
- ☐ 0.125" ALUMINUM SHEET
  - ☐ POWDER COATED COLOR:
  - ☐ ANODIZED

POWDER COAT COLORS

☐ WHITE ☐ RANCH GREEN
☐ MINT GREEN ☐ OTHER_____
☐ CAMEL

REVISIONS	CITY OF ALBUQUERQUE
	TRAFFIC TRAFFIC SIGNAL METER PEDESTAL DETAILS FOR SIGNAL DWG. 2571 JANUARY 2003