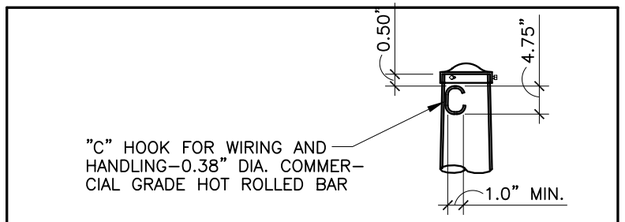

DETAIL 1 | POLE TOP

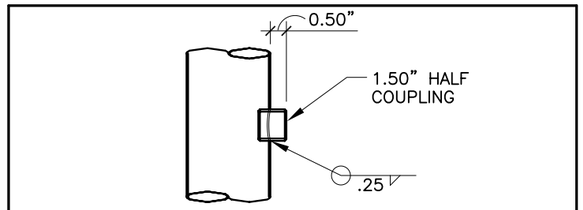

DETAIL 5 | POLE COUPLING

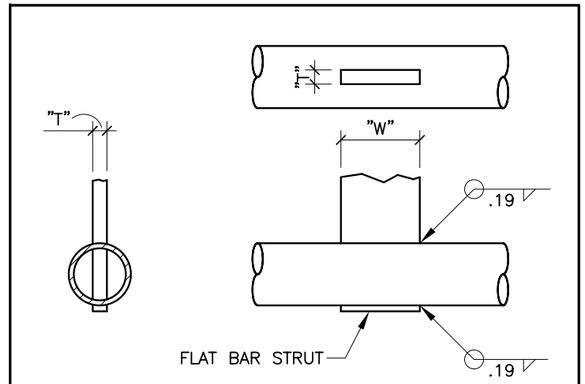

STRUT	ARM SPAN 15' THRU 25' "W" X "T"	ARM SPAN 30' THRU 40 "W" X "T"
A	5" X 0.50"	7" X 0.50"
B	———	5" X 0.50"

DETAIL 9 | MID BAR STRUT

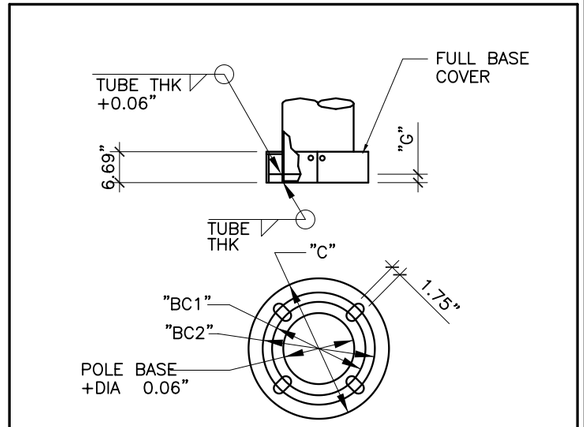

DETAIL 12 | POLE BASE

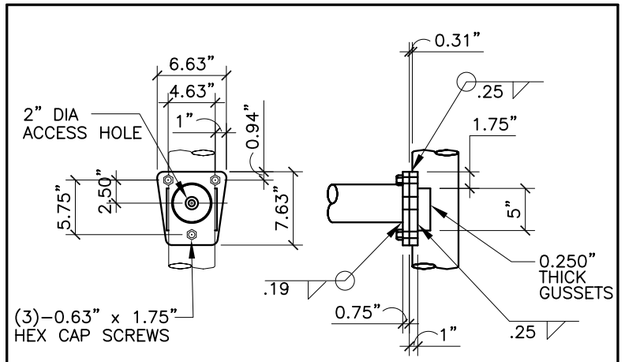

DETAIL 2 | CAMERA ARM ATTACHMENT

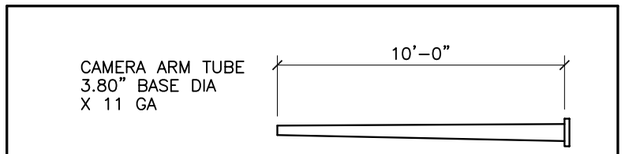

DETAIL 3 | CAMERA ARM

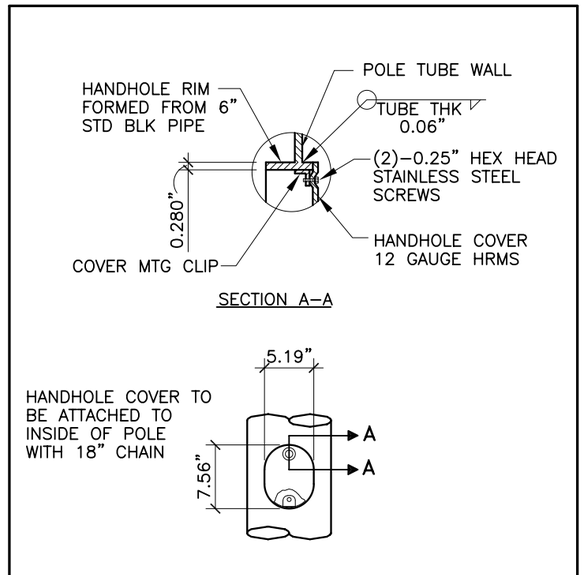

DETAIL 6 | EXTENSION HANDHOLE

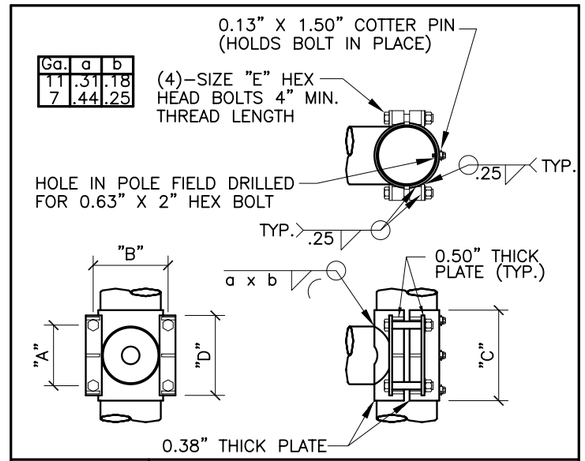

Ga.	a	b
11	.31	.18
7	.44	.25

DETAIL 10 | SIGNAL ARM ATTACHMENT

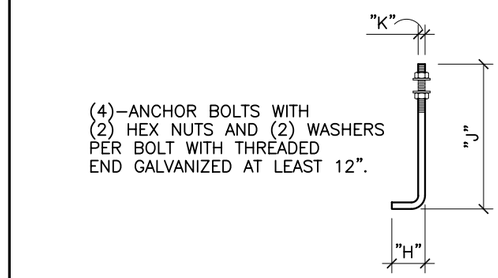

DETAIL 13 | ANCHOR BOLT

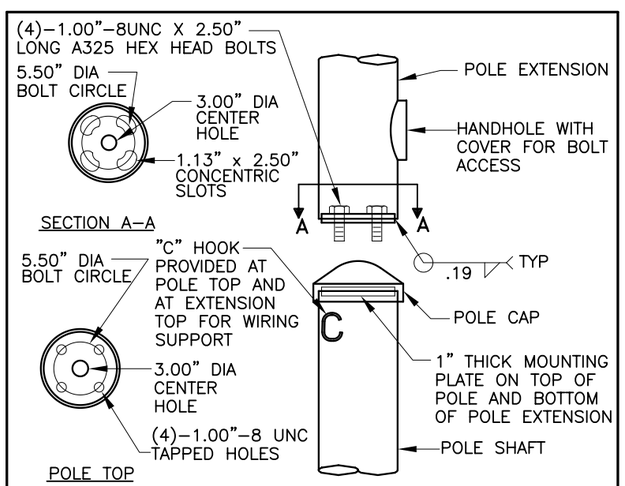

DETAIL 4 | POLE EXTENSION CONNECTION

SEE DETAIL 6

DETAIL 7 | HANDHOLE

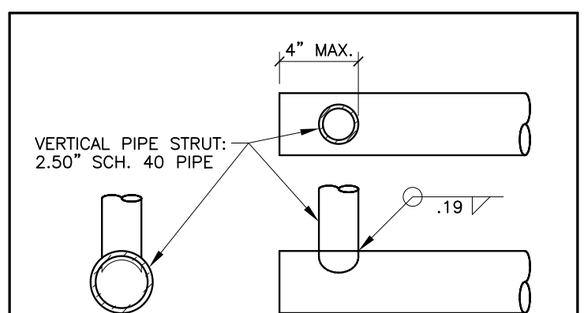

DETAIL 8 | END PIPE STRUT

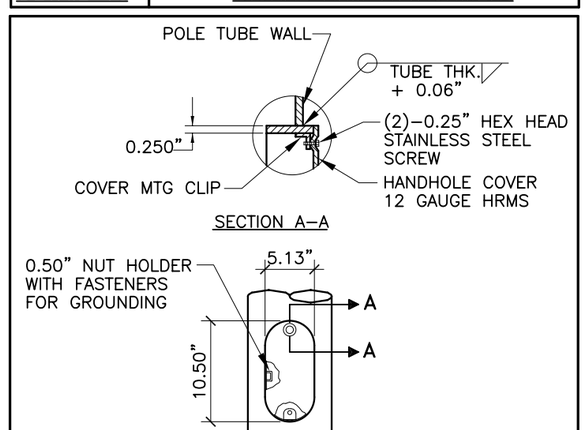

DETAIL 11 | HANDHOLE

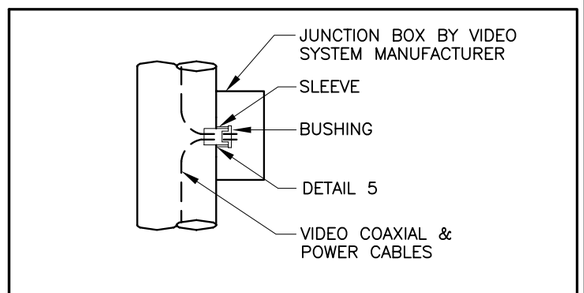

DETAIL 14 | VIDEO JUNCTION BOX

REVISIONS	CITY OF ALBUQUERQUE
	TRAFFIC TRAFFIC SIGNAL TYPE III STANDARD– MISCELLANEOUS DETAILS DWG. 2562d JANUARY 2003