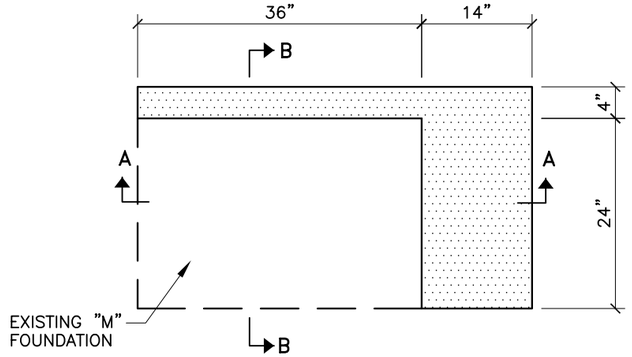

PLAN

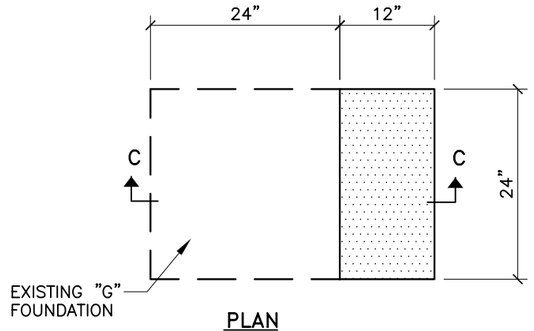

PLAN

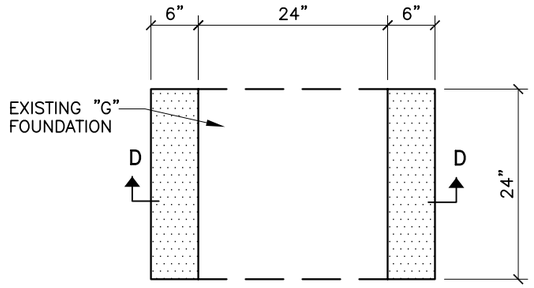

PLAN

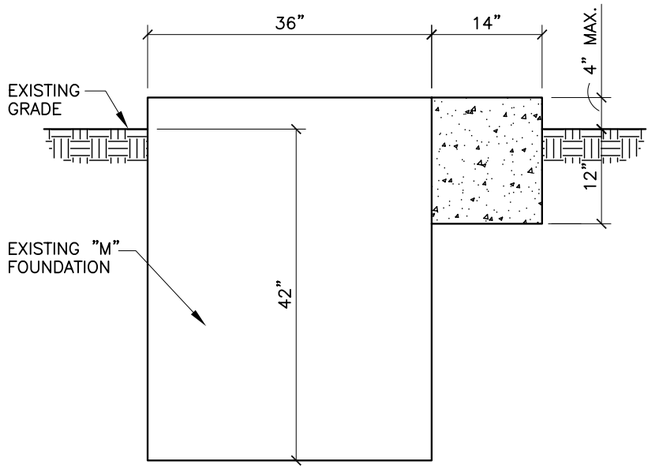

SECTION A–A

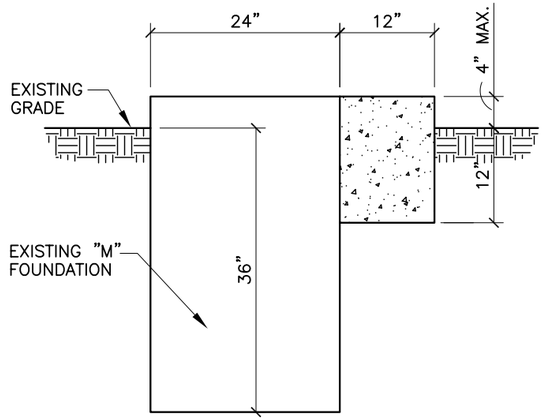

SECTION C–C

EXISTING "G" CABINET
CONVERSION TO NEW "M" CABINET

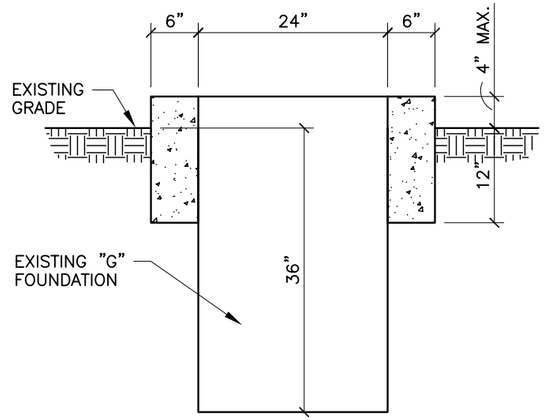

SECTION D–D

EXISTING "G" CABINET
CONVERSION TO NEW "M" CABINET

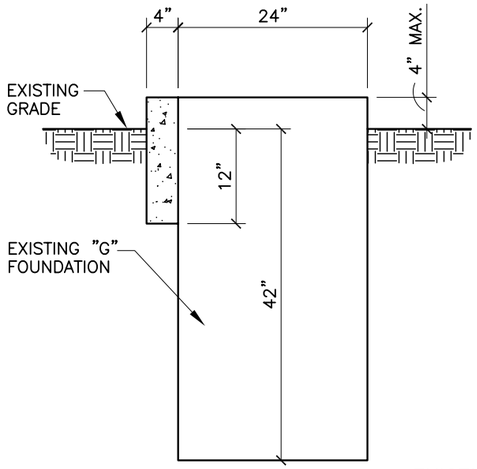

SECTION B–B

EXISTING "G" OR "M" CABINET
CONVERSION TO NEW "P" CABINET

ESTIMATED QUANTITIES FOR NEW FOUNDATION MODIFCATIONS

CABINET	SIZE	511000 STRUCTURAL CONCRETE CLASS A
CONVERTING G CABINET TO "M" CABINET	24"x24"x36"(EXISTING) 12"x24"x12" (NEW)	0.075 CY
CONVERTING "G"OR"M" CABINET TO "P" CABINET	24"x24"x36"(EXISTING) 14"x28"x12" (NEW) 4"x36"x12" (NEW)	0.138 CY
NEW "M" CABINET	12"x36"x42" (NEW)	0.78 CY
NEW "P" CABINET	28"x50"x42" (NEW)	1.26 CY

NOTES:

1. CONCRETE PER SEC. 101, EXTERIOR CONCRETE f'c=3500 PSI AT 28 DAYS.

REVISIONS	CITY OF ALBUQUERQUE
	TRAFFIC TRAFFIC SIGNAL CABINET FOUNDATION CONVERSION DWG. 2556 JANUARY 2003