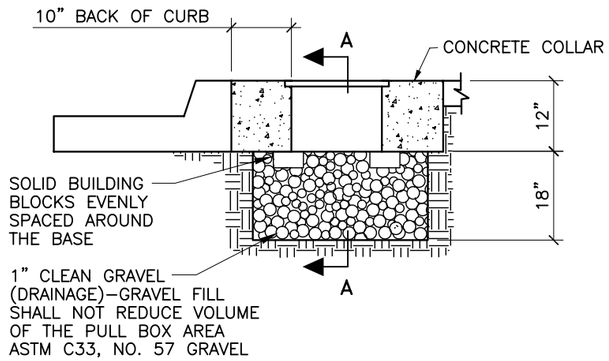

TYPICAL PULL BOX INSTALLATION

NOTE: SEE CONCRETE COLLAR DETAILS, THIS SHEET

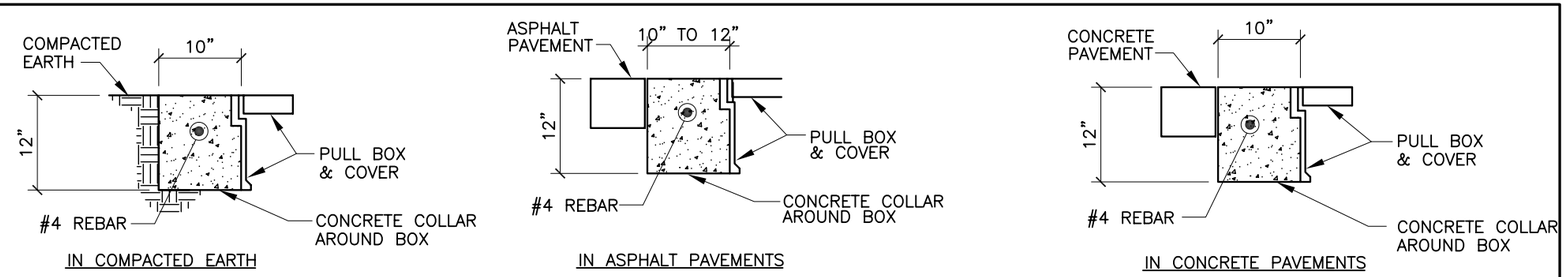

CONCRETE COLLAR DETAILS

NOTES: 1. THE CONCRETE IN THE COLLAR SHALL BE PER SEC. 101, EXTERIOR CONCRETE, f'c=3500 PSI AT 28 DAYS.
2. THE CONCRETE COLLAR SHALL BE CONSIDERED INCIDENTAL TO THE PULL BOX BID ITEMS.

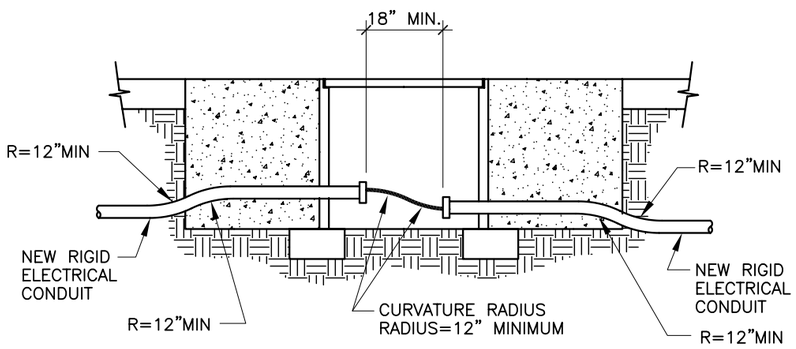

TRAFFIC SIGNAL PULL BOX (TYPICAL)
NEW CONDUIT INSTALLATION

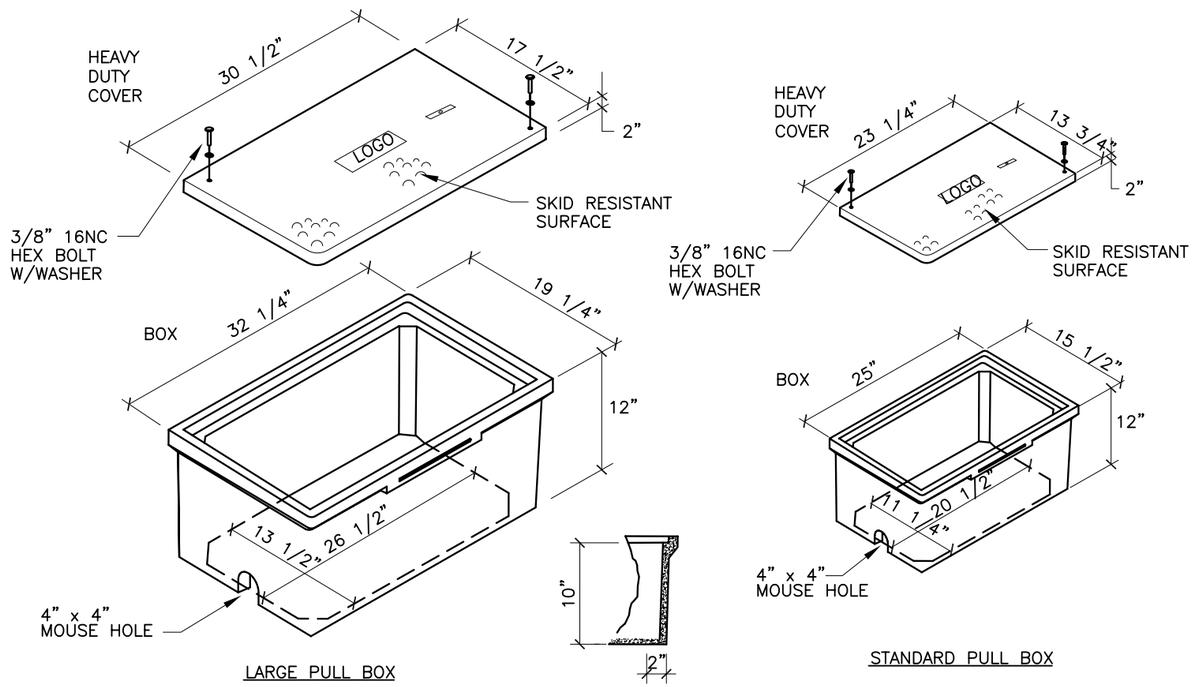

PULL BOX DETAILS

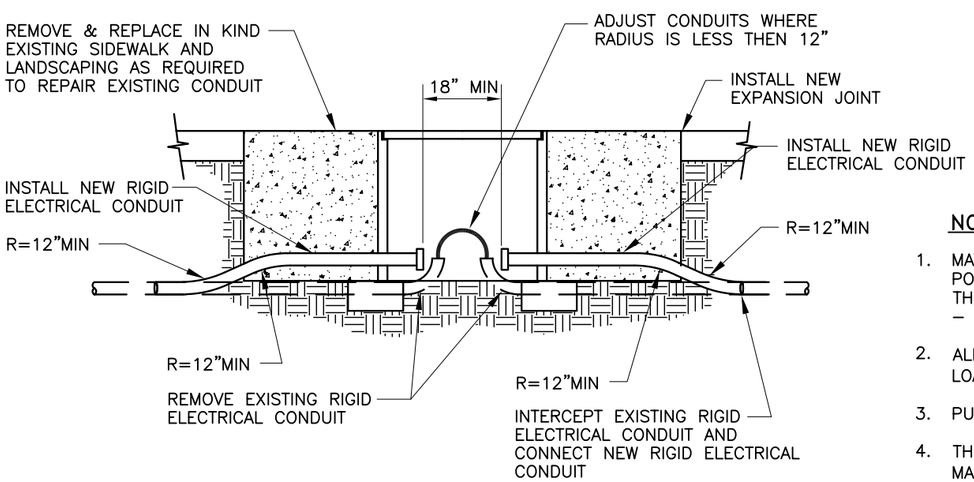

TRAFFIC SIGNAL PULL BOX (TYPICAL)

NOTES FOR HEAVY DUTY REINFORCED POLYMER MORTAR PULL BOX AND COVERS

1. MATERIAL TO BE AN AGGREGATE CONSISTING OF SAND AND GRAVEL BOUND TOGETHER WITH A POLYMER AND REINFORCED WITH CONTINUOUS WOVEN GLASS STRANDS. THE MATERIAL MUST HAVE THE FOLLOWING MECHANICAL PROPERTIES: COMPRESSIVE STRENGTH – 11,000 PSI, TENSILE STRENGTH – 1,700 PSI, FLEXURAL STRENGTH – 7,500 PSI.
2. ALL PULL BOX COVERS SHALL BE HEAVY DUTY REINFORCED POLYMER MORTAR, HAVING A SERVICE LOAD OF 22,568 LBS OVER 10" SQUARE (225 PSI).
3. PULL BOX TYPE AND LOGO SHALL BE APPROVED BY THE PROJECT MANAGER.
4. THE DIMENSIONS OF THE PULL BOXES SHOWN ARE NOMINAL DIMENSIONS AND MAY VARY AS TO THE MANUFACTURER'S RECOMMENDATIONS. ALL DIMENSIONS SHALL BE VERIFIED BY THE PROJECT MANAGER.
5. ELECTRICAL PULL BOX (STANDARD) SHALL BE A HEAVY DUTY REINFORCED POLYMER MORTAR PULL BOX AND COVER MEASURING 13 3/4" x 23 1/4" x 2".

REVISIONS	CITY OF ALBUQUERQUE
	TRAFFIC
	TRAFFIC SIGNAL PULL BOX DETAILS
	DWG. 2550 JANUARY 2003