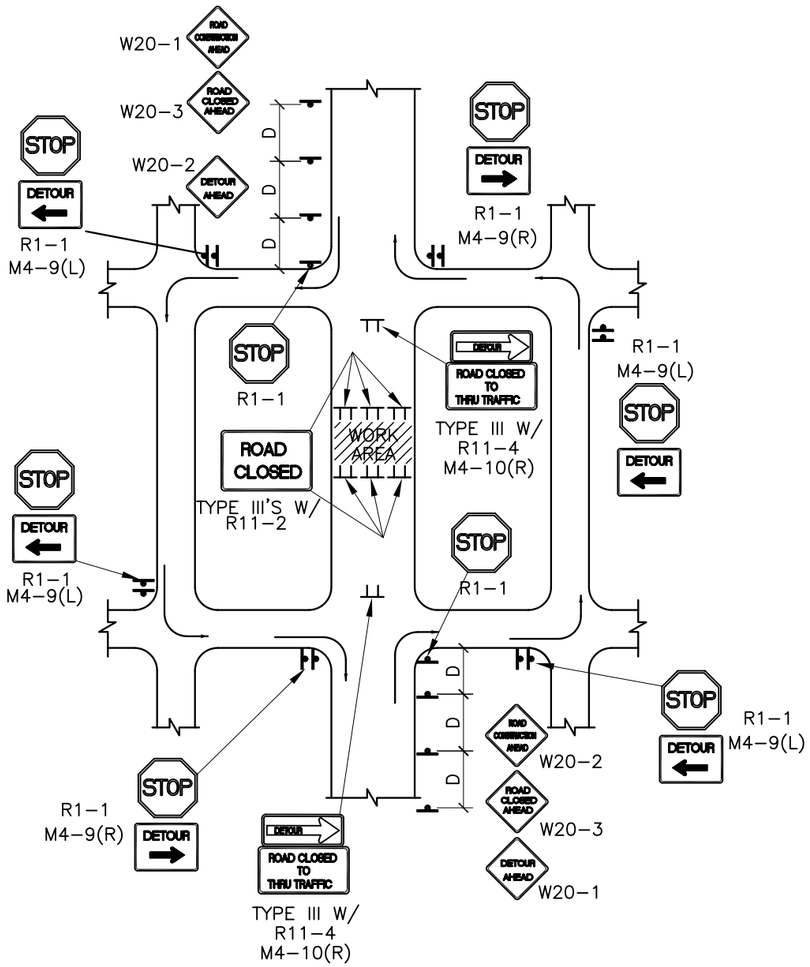

TYPICAL MID-BLOCK CLOSURE

NOTE: (R1-1) BASED ON FIELD CONDITIONS.

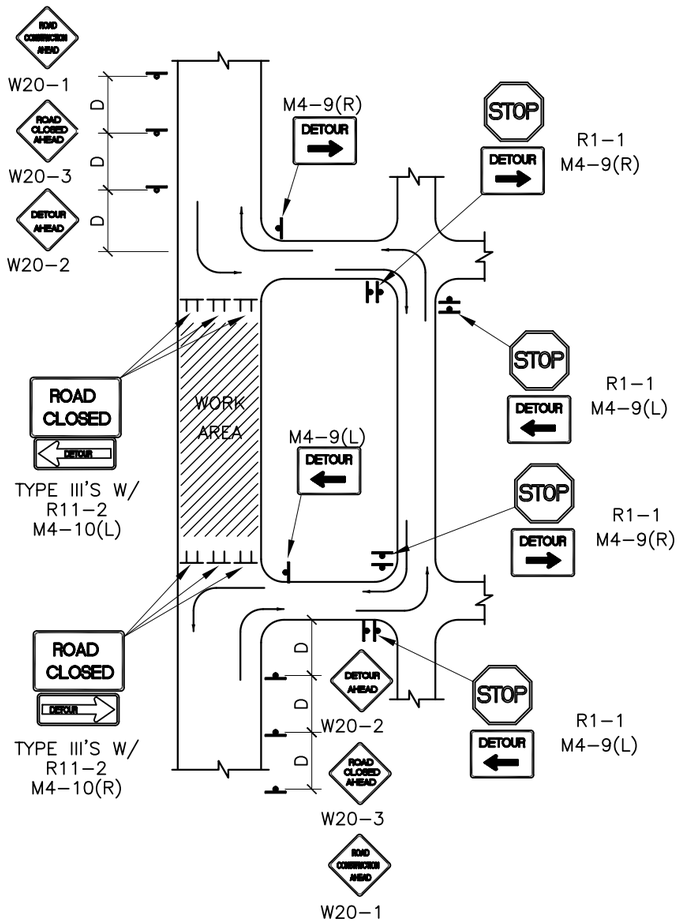

TYPICAL STREET CLOSURE

NOTE: (R1-1) BASED ON FIELD CONDITIONS.

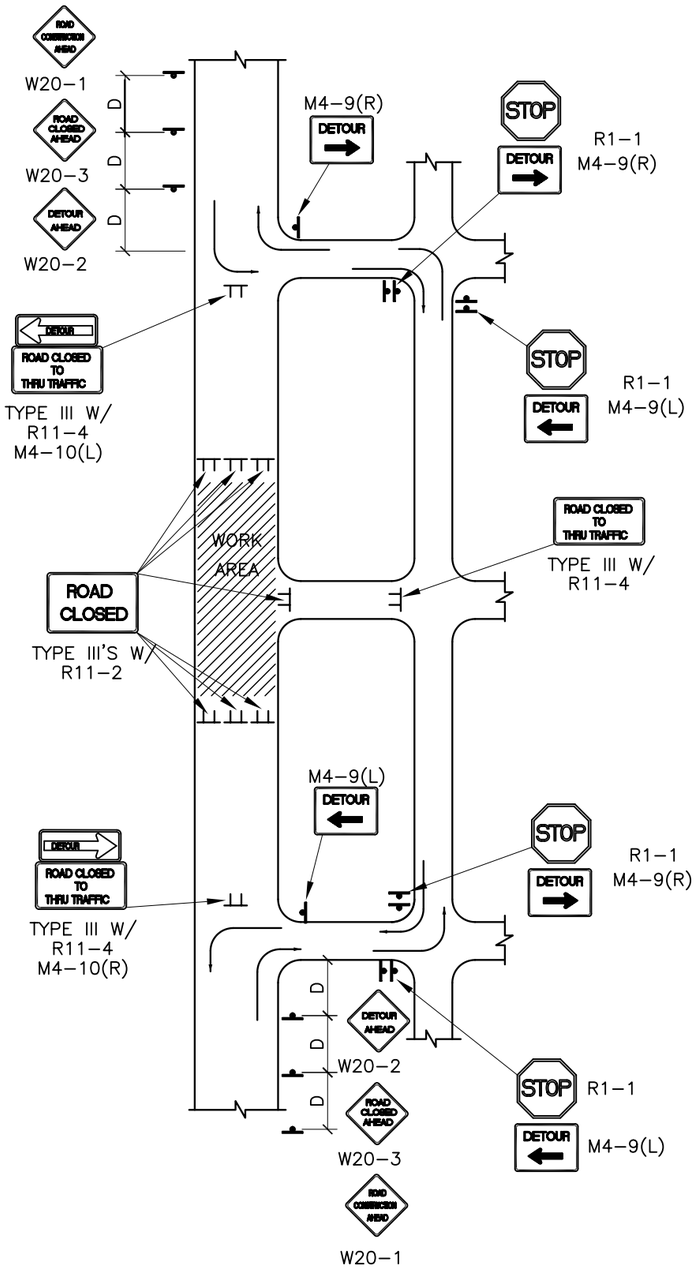

TYPICAL STREET CLOSURE

NOTE: (R1-1) BASED ON FIELD CONDITIONS.

REVISIONS	CITY OF ALBUQUERQUE
1/91	TRAFFIC CONTROL TYPICAL TRAFFIC CONTROL & SIGNING EXAMPLES (REF. MUTCD) DWG. 2541C JANUARY 2003