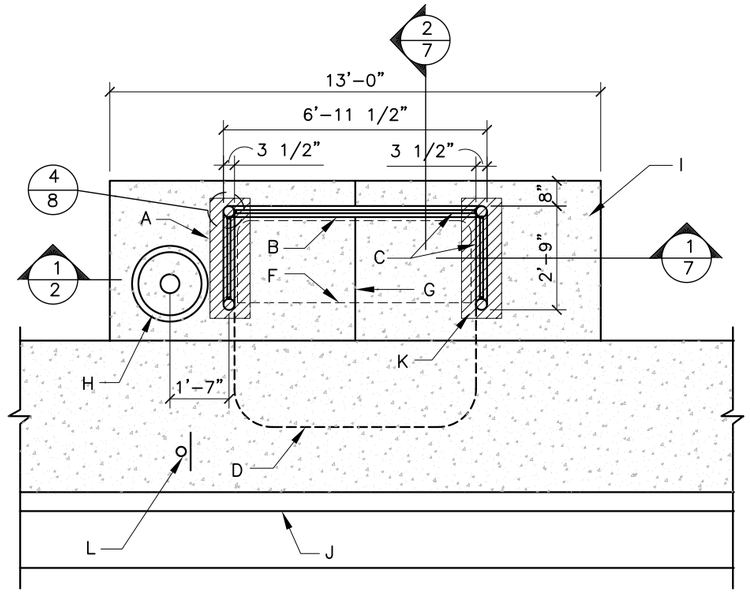

PLAN WITH SIDEWALK

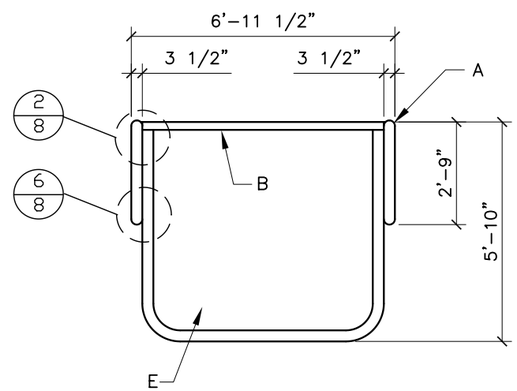

ROOF PLAN

CONSTRUCTION NOTES:

A. FRAME 3 1/2" O.D. STEEL PIPE, COPE & WELD PIPE, GRIND SMOOTH.

B. 2 1/2" O.D. STEEL PIPE COPE & WELD PIPE TO CHASSIS, GRIND SMOOTH.

C. 16 ga. PERFORATED STEEL PANEL, RIVETS OR TEMPER PROOF SCREWS FASTENED AT 8"o.c. TO 1/2" x 1" CHANNEL.

D. ROOF LINE ABOVE.

E. ROOF: HIGH STRENGTH F.R.P. SMOOTH SURFACE TOP AND BOTTOM. FASTEN TO 1/2" x 2" CHANNEL WITH RIVETS OR TAMPER PROOF SCREWS AT 8" o.c. PAINT TO MATCH SHELTER.

F. BENCH (SEE DETAILS ON STD. DWG. 2535.09).

G. 1/2" EXPANSION JOINT.

H. TRASH RECEPTACLE (SEE STD. DWG. 2535.10).

I. 4" SLAB WITH 4x4 – W4.0 WWF, USE 10' DEEP TURNDOWN AT PERIMETER, BROWN FINISH.

J. EXISTING CURB & SIDEWALK (SHADED). MATCH SLOPE OF CURB.

K. THICKENED SLAB. (TYP.)

L. BUS STOP SIGN. (TYP.)

REVISIONS	CITY OF ALBUQUERQUE
	BUS SHELTER 'D' PLAN & ROOF PLAN (W/ SIDEWALK)
	DWG. 2535.04 JANUARY 2003