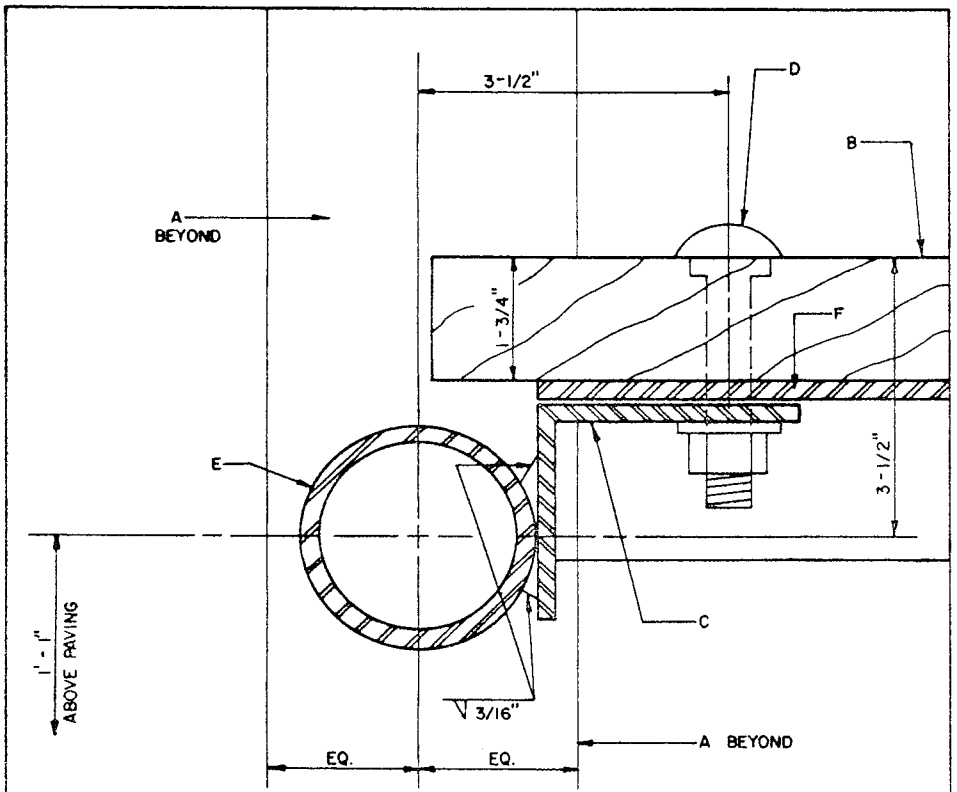

A/9 SEAT SUPPORT AT MAIN FRAME SUPPORT

CONSTRUCTION NOTES

A. 3"* STEEL PIPE, TYPICAL AT MAIN FRAME SUPPORTS.
B. HIGH BACK BUS BENCH(ES) TO BE MADE FROM 100% RECYCLED PLASTIC AS MANUFACTURED BY HAMMER'S PLASTIC RECYCLING CORPORATION OR APPROVED EQUAL.
C. 3" X 2-1/2" X 1/4" STEEL ANGLE (5" LENGTH) WELDED TO STEEL PIPE.
D. 5/8" CARRIAGE BOLT.
E. 2"* STEEL PIPE.
F. C7 x 9.8.

CITY OF ALBUQUERQUE

REVISIONS

BUS SHELTER 'A'
SEAT SUPPORT AT MAIN FRAME SUPPORT

DWG.2533.9

JUNE 1991