CASE	PAVED AREA SQ. YARDS	C. & G. LINEAL FEET
I	272	192
II	272	192
III	274	201

GENERAL NOTES:

1. SEE GENERAL NOTES DWG. 2510.

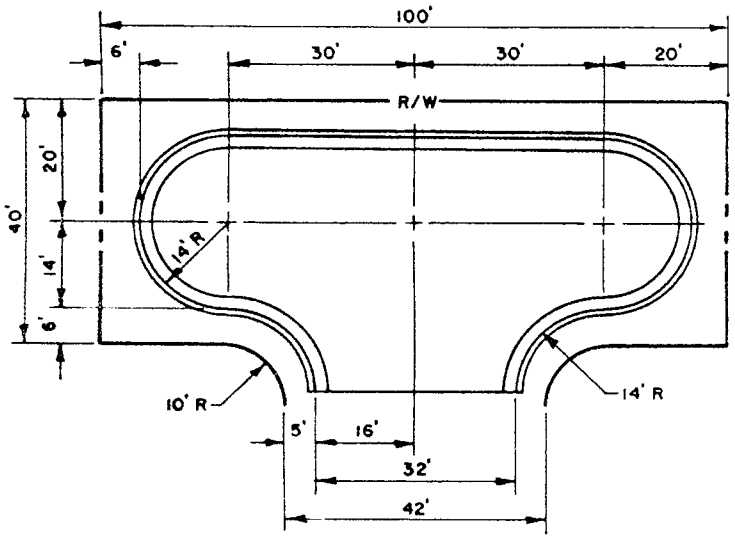

CASE I

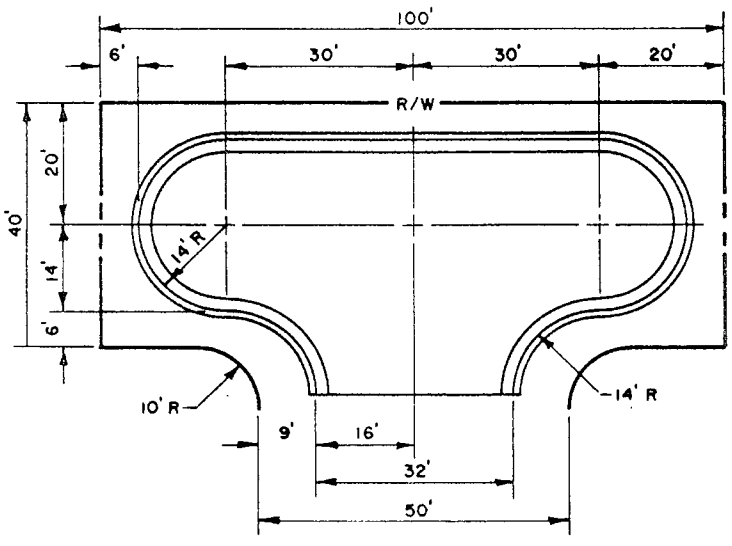

CASE II

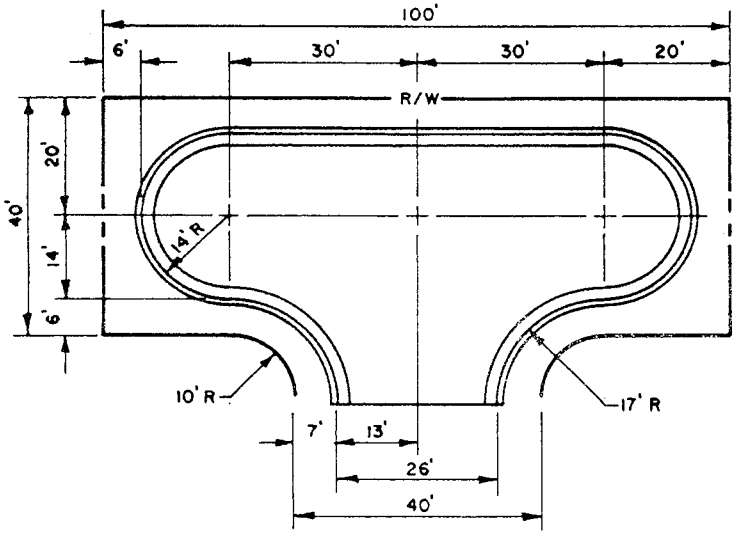

CASE III

REVISIONS
12-31-92

CITY OF ALBUQUERQUE

TRAFFIC

HAMMER HEAD CUL-DE-SACS

DWG. 2512

AUG. 1986