CASE	PAVED AREA SQ. YARDS	C. & G. LINEAL FEET
I	649	400
II	644	392
III	659	398

GENERAL NOTES;

1. SEE GENERAL NOTES DWG, 2510.

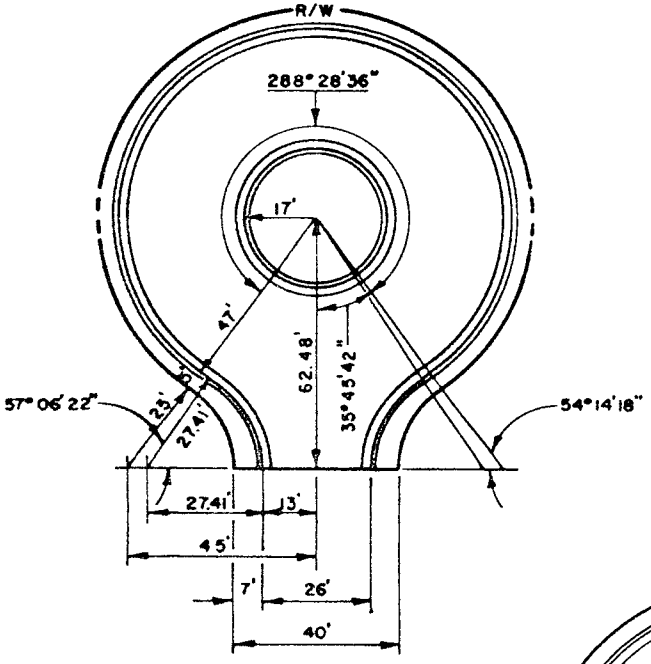

CASE I

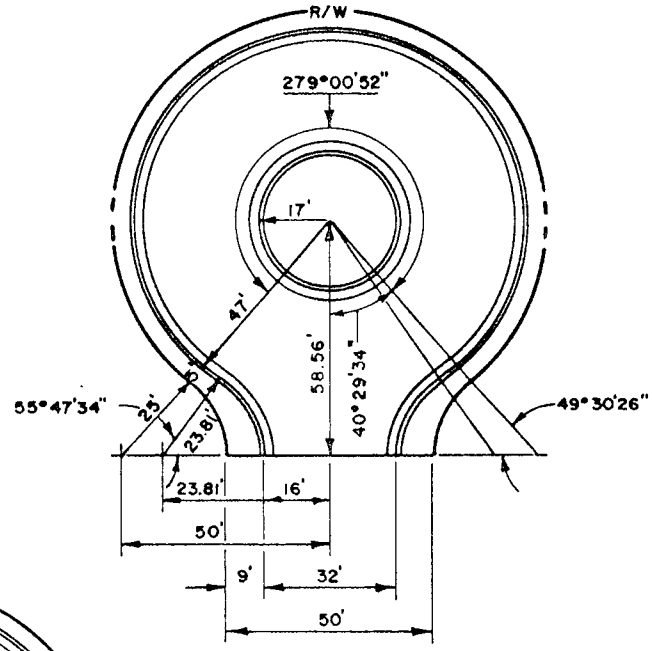

CASE II

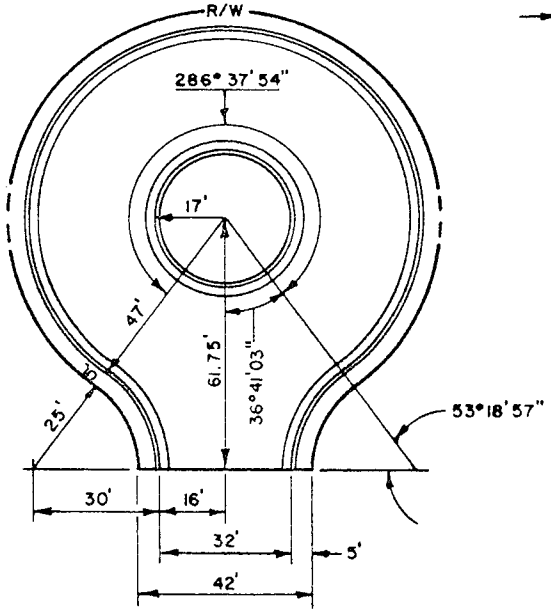

CASE III

REVISIONS
12-31-92

CITY OF ALBUQUERQUE

TRAFFIC

ISLAND CUL-DE-SACS

DWG. 2511

AUG. 1986