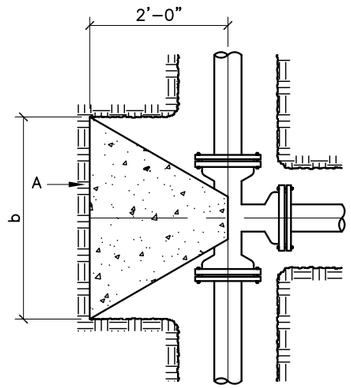


PLAN

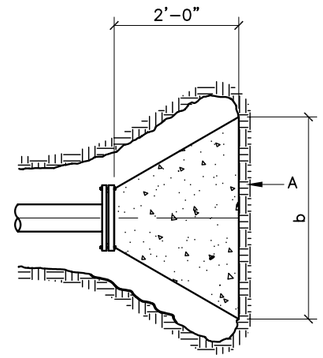


PLAN

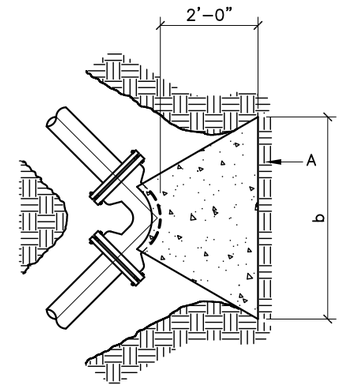


PLAN

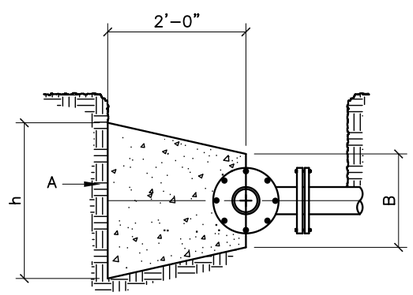


ELEVATION
CONCRETE BLOCKING
FOR TEE

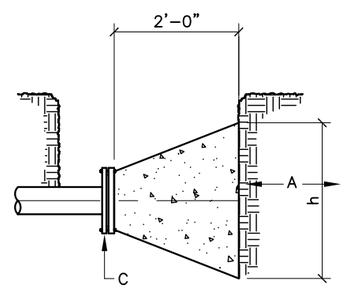


ELEVATION
CONCRETE BLOCKING
FOR PLUG OR CAP

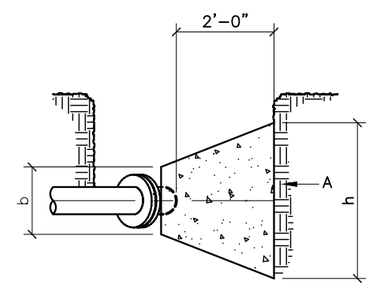


ELEVATION
CONCRETE BLOCKING
FOR ELBOW

## GENERAL NOTES:

1 ALL THRUST CONTROL BY RESTRAINED JOINTS ONLY UNLESS DIRECTED BY ENGINEER.

2 PIPE SIZE GREATER THAN 14" REQUIRES DESIGN BY ENGINEER TO BE SUBMITTED TO THE CITY FOR APPROVAL.

3 CONCRETE BLOCKING PER SEC. 101 EXTERIOR CONCRETE, f'c=3500 psi @ 28 DAYS.

| PIPE SIZE | ELBOW ANGLE | ELBOW (b) DIM. | ELBOW (h) DIM. | TEE OR PLUG (b) DIM. | TEE OR PLUG (h) DIM. |
|---|---|---|---|---|---|
| 4" | | | | 2' | 1' |
| 4" | 90° 45° | 2' | 2' | | |
| 4" | 22 1/2° 11 1/4° | 2' | 2' | | |
| 6" | | | | 2' | 2' |
| 6" | 90° 45° | 2' | 2' | | |
| 6" | 22 1/2° 11 1/4° | 2' | 2' | | |
| 8" | | | | 3' | 3' |
| 8" | 90° | 3' | 3' | | |
| 8" | 45° | 2' | 2' | | |
| 8" | 22 1/2° 11 1/4° | 2' | 2' | | |
| 10" | | | | 3' | 3' |
| 10" | 90° | 3'-6" | 3'-6" | | |
| 10" | 45° | 3' | 3' | | |
| 10" | 22 1/2° 11 1/4° | 2' | 2' | | |
| 12" | | | | 3'-6" | 3'-6" |
| 12" | 90° | 4' | 4' | | |
| 12" | 45° | 3'-6" | 3'-6" | | |
| 12" | 22 1/2° 11 1/4° | 2' | 2' | | |
| 14" | | | | 4' | 4' |
| 14" | 90° | 5' | 5' | | |
| 14" | 45° | 3'-6" | 3'-6" | | |
| 14" | 22 1/2° 11 1/4° | 3' | 3' | | |

## CONSTRUCTION NOTES:

A UNDISTURBED EARTH.

B O.D. OF PIPE + 8".

C O.D. OF CAP OR PLUG, MIN. 12"x12".

| REVISIONS | CITY OF ALBUQUERQUE |
|---|---|
| | WATER<br>CONCRETE BLOCKING<br>DESIGN |
| | DWG. 2320 JANUARY 2003 |