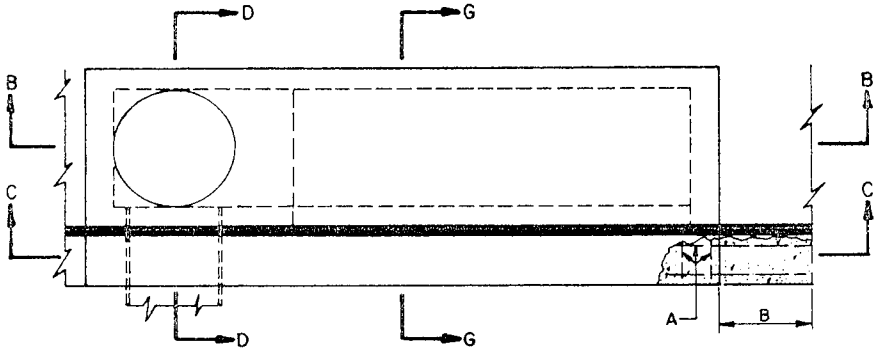

PLAN OF SPECIAL DROP INLET AT MEDIAN

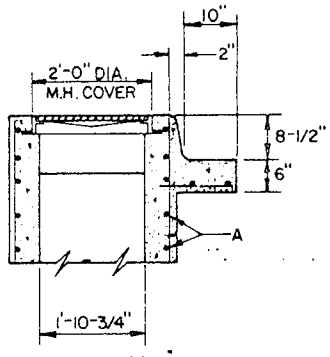

SECTION D-D

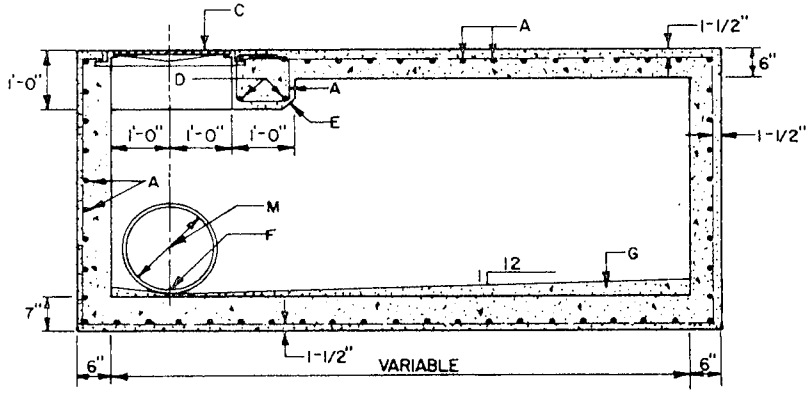

SECTION B-B

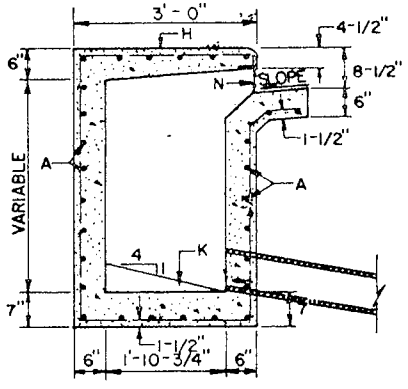

SECTION G-G

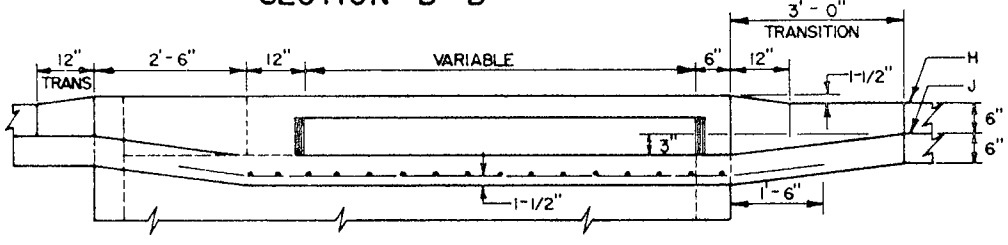

SECTION C-C

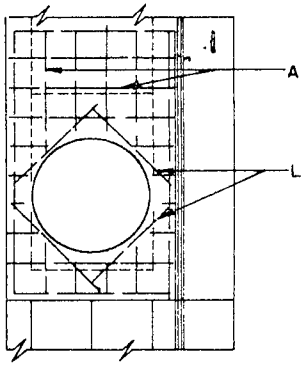

TOP MAT OF REINFORCEMENT

GENERAL NOTES

1. FOR STORM INLET GUTTER TRANSITION, SEE STD. DETAIL DWG. 2207.
2. OUTLET PIPE SIZE, PER DESIGN REQUIREMENT.

CONSTRUCTION NOTES

A. NO. 4 REBAR @ 6" O.C. EACH WAY.
B. EXTEND REBARS 1'-6" (TYP.)
C. MANHOLE FRAME AND COVER PER. CITY OF ALBUQUERQUE STD. DETAIL DWG. 2110.
D. 2 EACH, NO. 5 REBAR @ 6" O.C.
E. 2" CHAMFER.
F. INVERT PER PLAN.
G. CONCRETE FILL.
H. TOP OF MEDIAN CURB.
J. FLOWLINE.
K. CONCRETE FILL 4:1 MINIMUM SLOPE TOWARDS OUTLET AND 12:1 TRANSVERSE.
L. NO. 4 REBARS, 8 EACH.
M. OUTLET STORM DRAIN.
N. 6" MINIMUM OPENING

CITY OF ALBUQUERQUE

DRAINAGE

MEDIAN STORM INLET

DWG. 2273

JUNE 1992