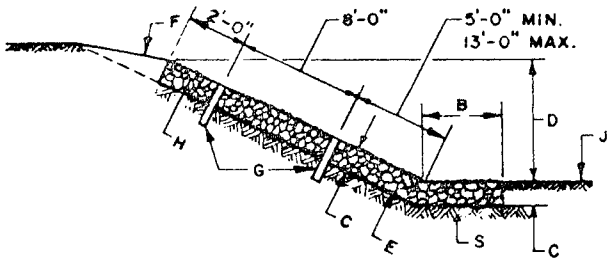

SECTION TYPE A

QUANTITIES PER LIN. FT.

SLOPE	RIPRAP CU. YDS.
$1\frac{1}{2}:1$	$\frac{C}{27}(B+1.803D+0.303C)$
$1\frac{3}{4}:1$	$\frac{C}{27}(B+2.016D+0.266C)$
$2:1$	$\frac{C}{27}(B+2.236D+0.236C)$
$3:1$	$\frac{C}{27}(B+3.162D+0.162C)$
$4:1$	$\frac{C}{27}(B+4.123D+0.123C)$

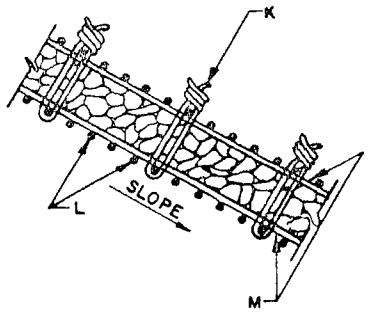

TYPICAL SECTION

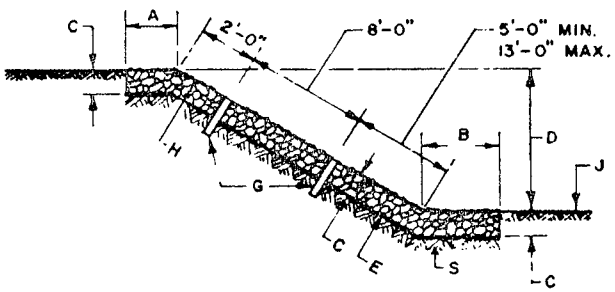

SECTION TYPE B

QUANTITIES PER LIN. FT.

SLOPE	RIPRAP CU. YDS.
$1:1$	$\frac{C}{27}(A+B+1.414D)$
$1\frac{1}{2}:1$	$\frac{C}{27}(A+B+1.803D)$
$1\frac{3}{4}:1$	$\frac{C}{27}(A+B+2.016D)$
$2:1$	$\frac{C}{27}(A+B+2.236D)$
$3:1$	$\frac{C}{27}(A+B+3.162D)$
$4:1$	$\frac{C}{27}(A+B+4.123D)$

GENERAL NOTES:

1. DETAIL FROM N.M.S.H.D. DETAIL, SERIAL BRR-001-05
2. WIRE FABRIC IS TO BE GALV. V-MESH, APPROX. WEIGHT: 48 LBS. PER 100 SQ. FT.
3. STEEL STAKES ARE CONSIDERED INCIDENTAL TO THE COMPLETION OF THE WORK & NO DIRECT MEASUREMENT OR PAYMENT WILL BE MADE THEREFOR.
4. IF LENGTH OF SLOPE IS 15' OR LESS ONLY ONE ROW OF STEEL STAKES 2' FROM THE TOP EDGE OF THE RIPRAP WILL BE REQUIRED UNLESS OTHERWISE NOTED ON PLANS.

CONSTRUCTION NOTES:

A,B,C & D DIMENSIONS TO BE SHOWN ON PLANS.

E. FILTER MATERIAL, 6" MIN. DEPTH AS SHOWN ON PLANS.

F. FILL & COMPACT AFTER PLACEMENT OF RIPRAP.

G. STEEL STAKES MAY BE RAILROAD RAILS NOT LESS THAN 30 LBS. PER FT., 4" O.D. STANDARD STRENGTH GALV. ST. PIPE OR 4 X 4 X $\frac{3}{8}$ STEEL ANGLES. STEEL STAKES SHALL BE 5' LONG AND 8' O.C. AND SHALL BE RECESSED TO A MAX. OF 3", BELOW TOP OF RIPRAP.

H. WIRE ENCLOSED RIPRAP.

J. FINISHED GROUND LINE.

K. NO. 9 GAGE GALV. WIRE TIES APPROX. 2' O.C. LONGITUDINALLY & TRANSVERSLEY.

L. MAIN WIRES TO BE PLACED PERPENDICULAR TO SLOPE.

M. WIRE FABRIC.

N. TRANSVERSE SPLICE.

P. LONGITUDINAL SPLICE, NO. 9 GALV. WIRE TIES (ONE WRAP ALTERNATE SPACES).

Q CROSS WIRES: SINGLE $12\frac{1}{2}$ GAGE WIRES SPACED AT 2" WITH NOT LESS THAN TWO TURNS AROUND MAIN WIRES.

R. MAIN WIRES: TWO NO. $12\frac{1}{2}$ GAGE STRANDED WIRES SPACED AT 4".

S SUBGRADE COMPACTED TO 90% MAX. DENSITY AS PER ASTM D 1557, 6" MIN. DEPTH.

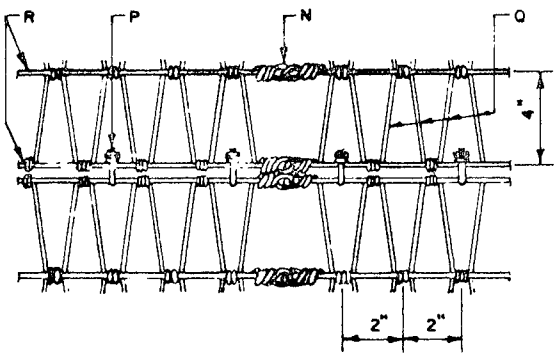

DETAIL OF WIRE FABRIC AND NORMAL SPLICE

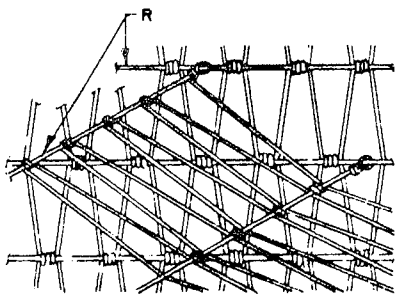

DETAIL OF SPLICE AT SKEWED INTERSECTIONS

"V" MESH

REVISIONS	CITY OF ALBUQUERQUE
	DRAINAGE WIRE ENCLOSED RIPRAP DWG. 2270 AUG. 1986