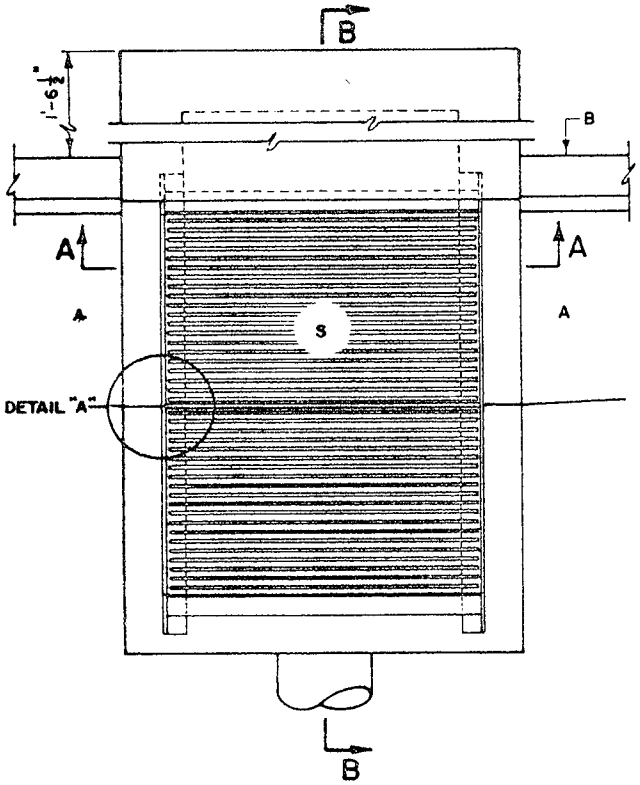

PLAN

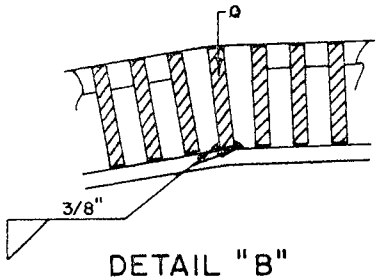

DETAIL "B"

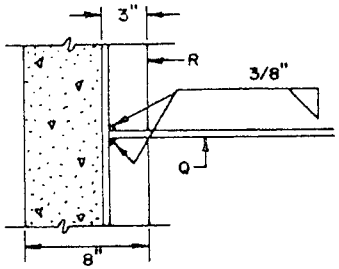

DETAIL "A"

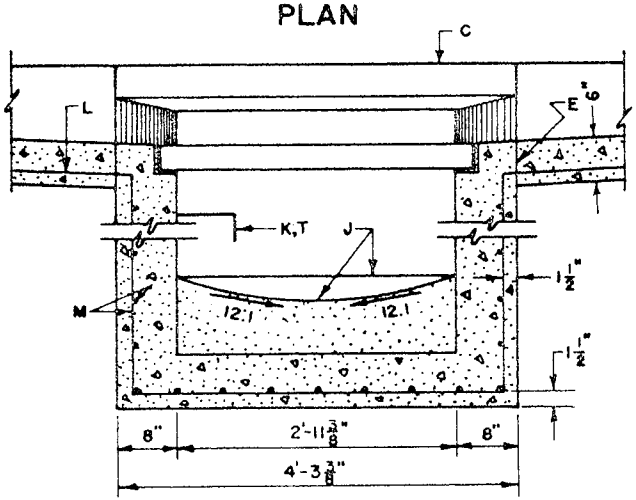

SECTION A-A

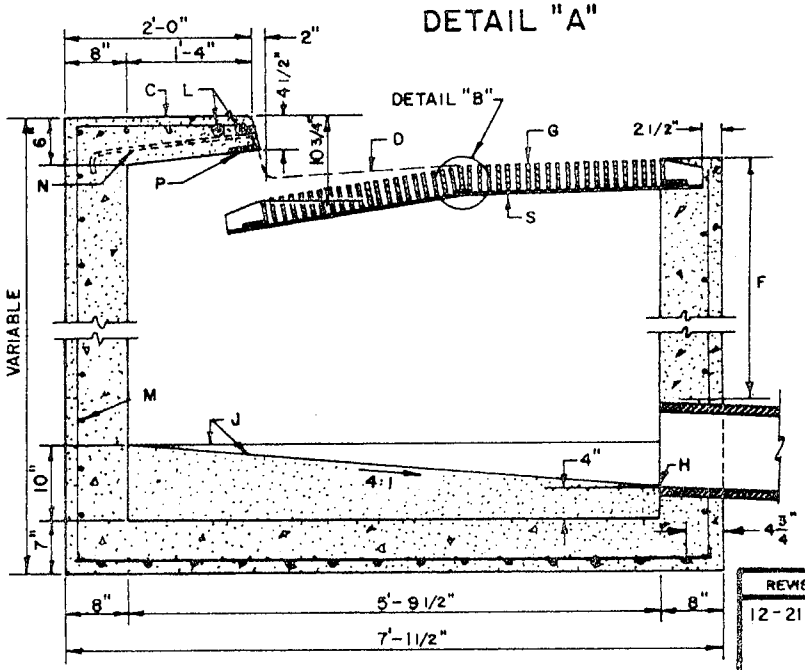

SECTION B-B

GENERAL NOTES:

1. FOR STORM INLET GUTTER TRANSITION, SEE DWG. 2207.
2. OUTLET PIPE SIZE, PER DESIGN REQUIREMENT.
3. FOR FRAME & GRATING, SEE DWG 2216, 2220 & 2221.
4. FOR ANCHOR DETAIL, SEE DWG 2205.

CONSTRUCTION NOTES:

A. GUTTER TRANSITION.

B. BACK OF CURB.

C. TOP OF CURB.

D. NORMAL GUTTER LINE.

E. CONSTRUCTION JOINT.

F. 1'-10" MIN. UNLESS OTHERWISE DIRECTED.

G. SLOPE GRATE TO PAVEMENT GRADE.

H. INVERT PER DESIGN.

J. CONCRETE FILL, MINIMUM SLOPES AS SHOWN.

K. FOR STORM INLET DEPTHS GREATER THAN 4' INSTALL STD STEPS, SEE DWG 2229.

L. EXTEND NO. 4 REBARS 18" INTO CURB ON EACH SIDE OF STORM INLET.

M. NO. 4 BARS AT 6" O.C.

N. ANCHOR.

P. 3 1/2" X 3 1/2" X 1/2" X 4'-4".

Q. 3 1/2" X 1/2" X 3'-4 3/8".

R. 4" X 3" X 1/2" X 5'-2".

S. FRAME AND GRATE.

T. STEPS ON DOWNSTREAM FACE.

CITY OF ALBUQUERQUE

REVISIONS
12-21-92

DRAINAGE

STORM INLET TYPE "B"

DWG. 2203

AUG. 1986