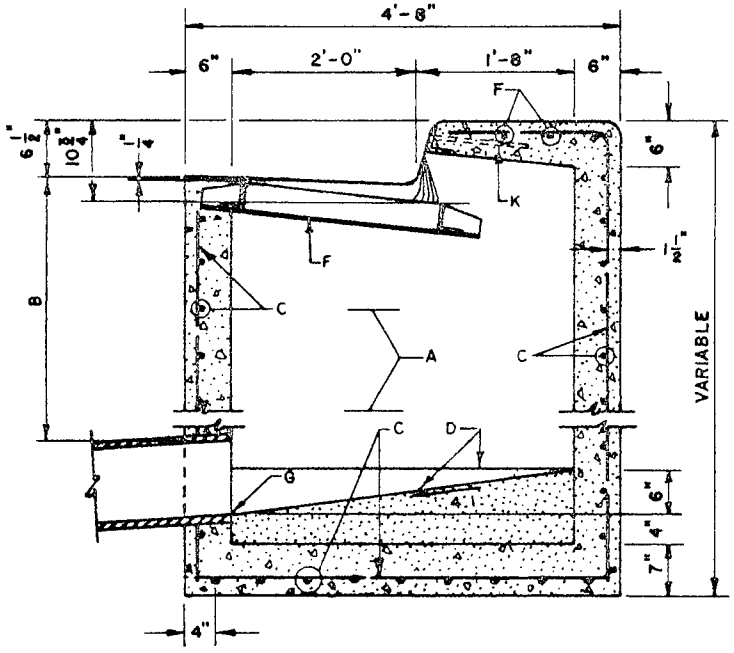

SECTION B-B

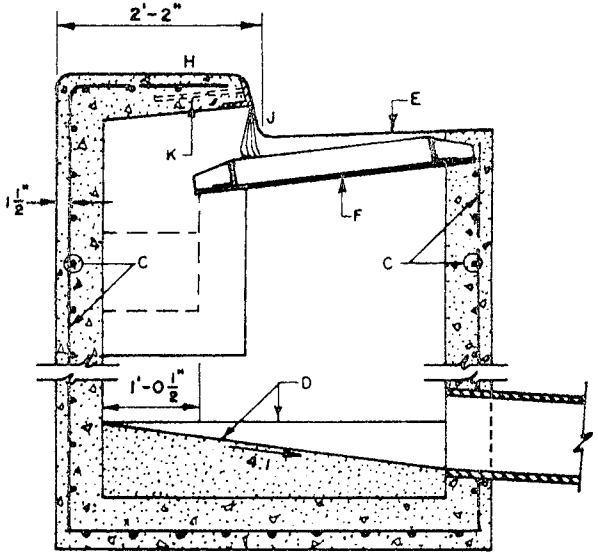

SECTION C-C

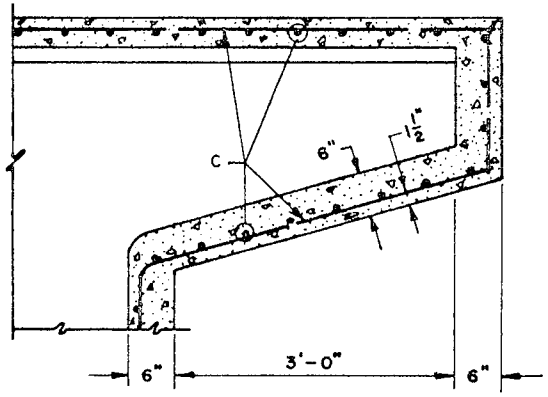

SECTION D-D

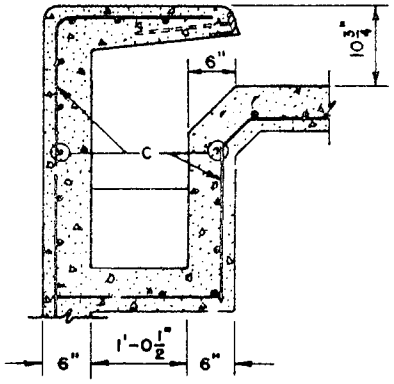

SECTION E-E

GENERAL NOTES:

1. SEE DWG 2201 FOR PLAN AND SECTION A-A.
2. GENERAL NOTES 2, 3 & 4 ON DWG 2201 ALSO APPLY TO THIS DWG.
3. FOR ANCHOR DETAIL, SEE DWG 2205

CONSTRUCTION NOTES:

A. STORM INLET STEPS, SEE DWG 2229 FOR SPACING.

B. 1"-10" MIN UNLESS OTHER WISE DIRECTED.

C. NO. 4 BARS AT 6" O.C. EACH WAY.

D. CONCRETE FILL, MINIMUM SLOPES SHOWN IN SECTIONS.

E. NORMAL GUTTER.

F. GRATE FRAME.

G. INVERT ELEVATION PER DESIGN.

H. TOP OF CURB.

J. FLOWLINE.

K. ANGLE ANCHOR.

CITY OF ALBUQUERQUE

REVISIONS

DRAINAGE
STORM INLET TYPE "A"
SECTIONS B-B, C-C, D-D & E-E
DWG. 2202

AUG. 1986