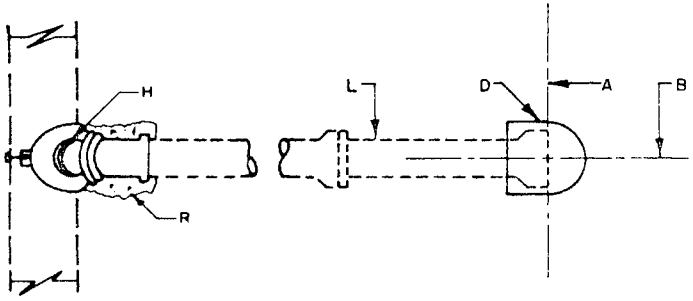

SERVICE LINE PLAN

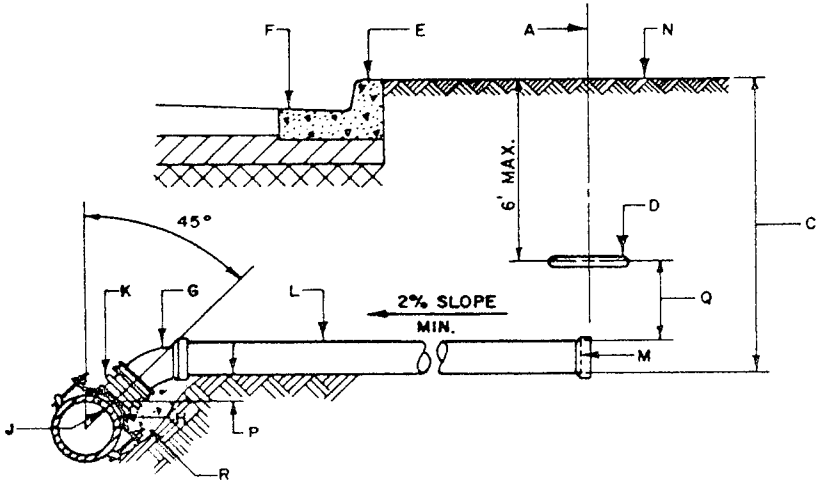

CROSS SECTION

GENERAL NOTES

1. ALL SERVICE LINES SHALL CONFORM TO THE PLUMBING CODE OF THE CITY OF ALBUQUERQUE.

CONSTRUCTION NOTES

A. RIGHT-OF-WAY LINE.
B. CENTER LINE SERVICE LINE.
C. MIN. OF 4FT. TO 6FT. FROM INVERT TO TOP OF CURB AT RIGHT-OF-WAY LINE. MIN. DEPTH WILL DEPEND ON THE DEPTH OF THE MAIN SEWER LINE, THE MIN. SERVICE LINE SLOPE, THE DEPTH OF THE LOT BEING SERVED, LOCATION OF THE HOUSE ON THE LOT, AND THE GRADE OF THE LOT.
D. ELECTRONIC MARKER DISC., COLOR CODED GREEN, PLACED ONLY IF SERVICE HOOK-UP IS POSTPONED.
E. STAMP OR CHISEL 3" SIZE "S" ON TOP OF CURB OVER LOCATION OF SERVICE LINE, MIN. 1/4" DEEP.
F. CURB AND GUTTER.
G. 22.5° OR 45° BEND.
H. CORE DRILLED, USING FOWLER QUIK-WAY DRILL SYSTEM, OR PILOT HOLE CUTTER SYSTEM OR APPROVED EQUAL.
J. SERVICE LINE SHALL NOT PROTRUDE INTO SEWER MAIN.
K. SANITARY SEWER TAPPING TEE, USING PIONEER OR GENERAL ENGINEERING CO. SADDLES OR APPROVED EQUAL. DO NOT OVER TIGHTEN SADDLE BOLTS WHICH WOULD PREVENT FREE PASSAGE OF REQUIRED MANDREL.
L. SERVICE LINE, (C.I. SOIL PIPE, SERVICE WEIGHT).
M. PLUG OR CAP.
N. GROUND LEVEL.
P. SAME ELEVATION OR HIGHER.
Q. APPROXIMATELY 6" BUT DEPTH OF BURIAL SHALL NOT BE MORE THAN 6'.
R. BACKFILL UNDER SERVICE WITH MIN. 1 CUBIC FOOT OF P.C. CONCRETE ("SACKCRETE" OR EQUAL ALLOWABLE THIS INSTALLATION).

CITY OF ALBUQUERQUE

REVISIONS	SEWER
11-14-91	SERVICE LINE DETAILS
	DWG. 2125 AUG. 1986