SECTION 2300
STANDARD DETAILS FOR WATER

DWG. NO.	TITLE
2301	WATERLINE CONNECTION DETAILS
2305	CONCRETE CYLINDER PIPE RIGID JOINT DETAIL
2315	PIPE TRENCH TERMINOLOGY
2320	CONCRETE BLOCKING DESIGN
2326	WATER VALVE BOX
2328	RING & COVER FOR VALVE BOX
2333	WATER VALVE ANCHORAGE
2334	LARGE DIAMETER VALVE VAULT
2340	FIRE HYDRANT INSTALLATION
2344	AIR RELEASE FIRE HYDRANT CONNECTION
2347	DETAILS ON TYPICAL FIRE HYDRANT LOCATIONS
2350	AIR RELEASE VALVE
2351	CONC. CYL. BUTTERFLY VALVE INSTALLATION DETAILS
2352	DUCTILE IRON BUTTERFLY VALVE INSTALLATION DETAILS
2353	SURGE RELIEF VALVE STATION
2354	STANDARD PRV STATION, NO METER
2355	STANDARD PRV STATION WITH PROPELLER METER
2356	STANDARD PRV STATION WITH POWER/TELEMETRY
2357	STANDARD PRV STATION STRUCTURAL DETAILS
2358	THRUST TIE DETAILS
2361	TYPICAL METER BOX INSTALLATIONS
2362	METERED SERVICE LINE INSTALLATIONS
2363	METERED SERVICE LINE INSTALLATIONS
2366	DOUBLE METER BOX FOR 3/4" AND 1" METERS
2367	SINGLE METER BOX & COVER FOR 1-1/2" & 2" METERS
2368	METER BOX COVER AND LID
2369	HEAVYWEIGHT METER BOX COVER AND LID
2370	TYPE “A” OR “B” PITS FOR 3" OR LARGER METERS
2380	BORING INSTALLATION
2385	REDUCED PRESSURE PRINCIPLE BACKFLOW PREVENTION ASSEMBLY (RPBA)
2386	DOUBLE CHECK VALVE ASSEMBLY (DCVA)
2387	DOUBLE CHECK - DETECTOR CHECK ASSEMBLY (DCDA)
2388-A	PRESSURE VACUUM BREAKER (PVB)
2388-B	PRESSURE VACUUM BREAKER (PVB)
2389	ENCLOSURES
2390	INSTALLATION FOR CONTINUOUS SERVICE
2391	LANDSCAPE IRRIGATION SYSTEM
2392	EXAMPLES OF LANDSCAPING IRRIGATION SYSTEM
2394	PRIVATE FIRE PROTECTION SYSTEMS
2395	APPROVED METHODS OF FILLING TANKS

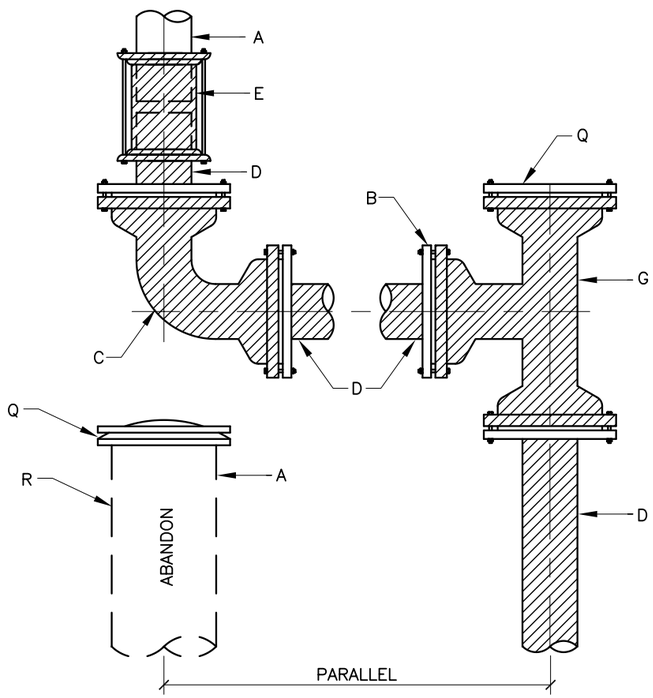

REPLACEMENT OF STEEL LINES 4"–12"
CONNECTION DETAILS

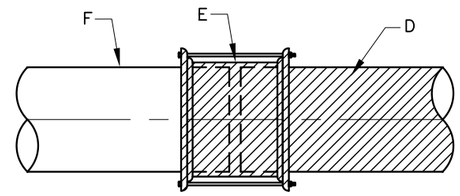

TRANSITION COUPLING
FROM D.I. OR P.V.C. TO A.C. PIPE

GENERAL NOTES:

1 ALL NEW PIPE AND FITTINGS SHALL BE PROVIDED WITH THRUST CONTROL.

2 THRUST CONTROL SHALL BE BY RESTRAINED JOINTS ONLY UNLESS DIRECTED OTHERWISE BY ENGINEER.

CONSTRUCTION NOTES:

A EXISTING STEEL PIPE.

B REDUCE AT TEE, IF EXISTING LINE IS SMALLER THAN NEW LINE.

C M.J., C.I. ELBOW WITH JOINT RESTRAINT.

D NEW D.I. OR P.V.C., WITH VALVE AS DIRECTED.

E RESTRAINED TRANSITION COUPLING FOR A.C. RESTRAINED SOLID SLEEVE FOR D.I., C.I. AND PVC.

F EXISTING D.I., OR C.I. OR P.V.C. IF A.C., USE PAD ADAPTER.

G M.J. C.I. TEE WITH JOINT RESTRAINT.

H GATE VALVE FL.–M.J WITH JOINT RESTRAINT.

J WELDING COLLAR.

K STEEL WELDING NECK FL.

L TAR COAT COLLAR, NECK AND DAMAGED PIPE COATING.

M M.J. FLANGE.

N FLANGE.

P PRESSURIZED CONNECTION.

Q M.J., C.I. PLUG OR CAP WITH JOINT RESTRAINT.

R REMOVE AT LEAST 10' OF PIPE TO BE ABANDONED AND CAP OR PLUG.

S TAC–WELD SACRIFICIAL ANODE TO STEEL PIPE.

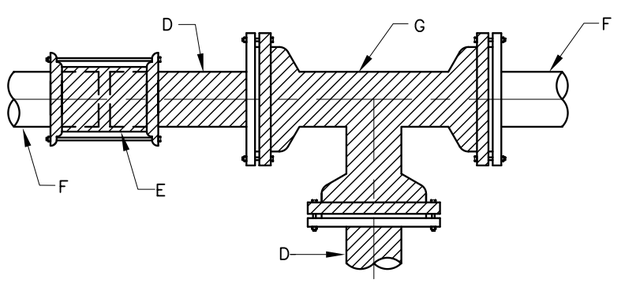

TEE INSERTION D.I., P.V.C. OR A.C. PIPE

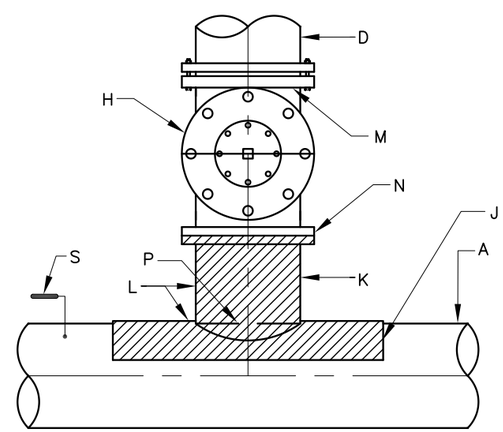

CONNECTION TO EXISTING STEEL PIPE

REVISIONS	CITY OF ALBUQUERQUE
	WATER WATERLINE CONNECTION DETAILS DWG. 2301 JANUARY 2003

GENERAL NOTES:

1 SEE PLAN AND PROFILE SHEETS FOR LENGTH IN FEET OF RIGID PIPE ON EITHER SIDE OF BEND.

2 CARE MUST BE EXERCISED NOT TO OVERHEAT RUBBER GASKET WHEN WELDING.

CONSTRUCTION NOTES:

A COMPLETE COIL PARALLEL TO END OF PIPE.

B FIELD WELD, CONTINUOUS.

C FIELD–APPLIED CEMENT MORTAR COATING.

D RUBBER GASKET.

E STEEL CYLINDER PORTION OF PIPE.

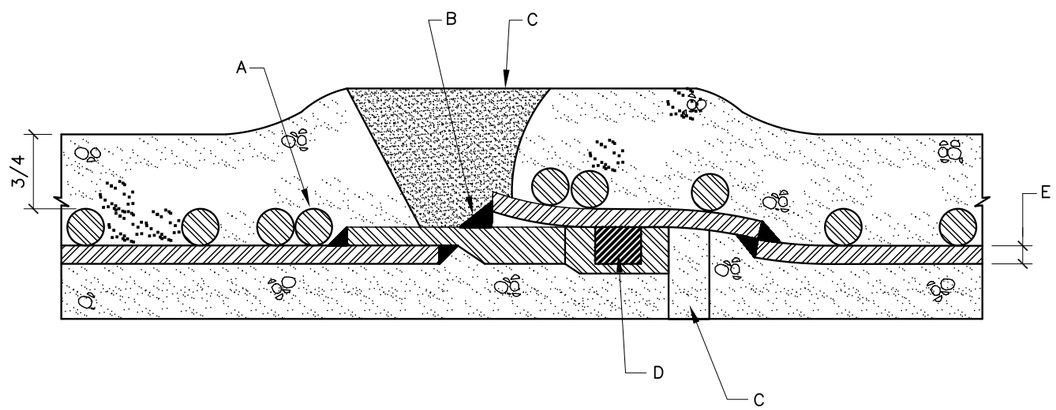

REVISIONS	CITY OF ALBUQUERQUE
	WATER CONCRETE CYLINDER PIPE RIGID JOINT DETAIL DWG. 2305 JANUARY 2003

GENERAL NOTES:

1 MECHANICAL TAMPERS SHALL NOT BE USED IN THE INITIAL BACKFILL REGION FOR FLEXIBLE PIPE. WHEN FLEXIBLE PIPE IS USED, CONTRACTOR SHALL, PRIOR TO THE START OF CONSTRUCTION, PROVIDE THE PROPOSED COMPACTION METHOD IN THE INITIAL BACKFILL REGION TO THE CITY FOR APPROVAL.

2 MINIMUM CLASS "C" BEDDING WILL BE USED.

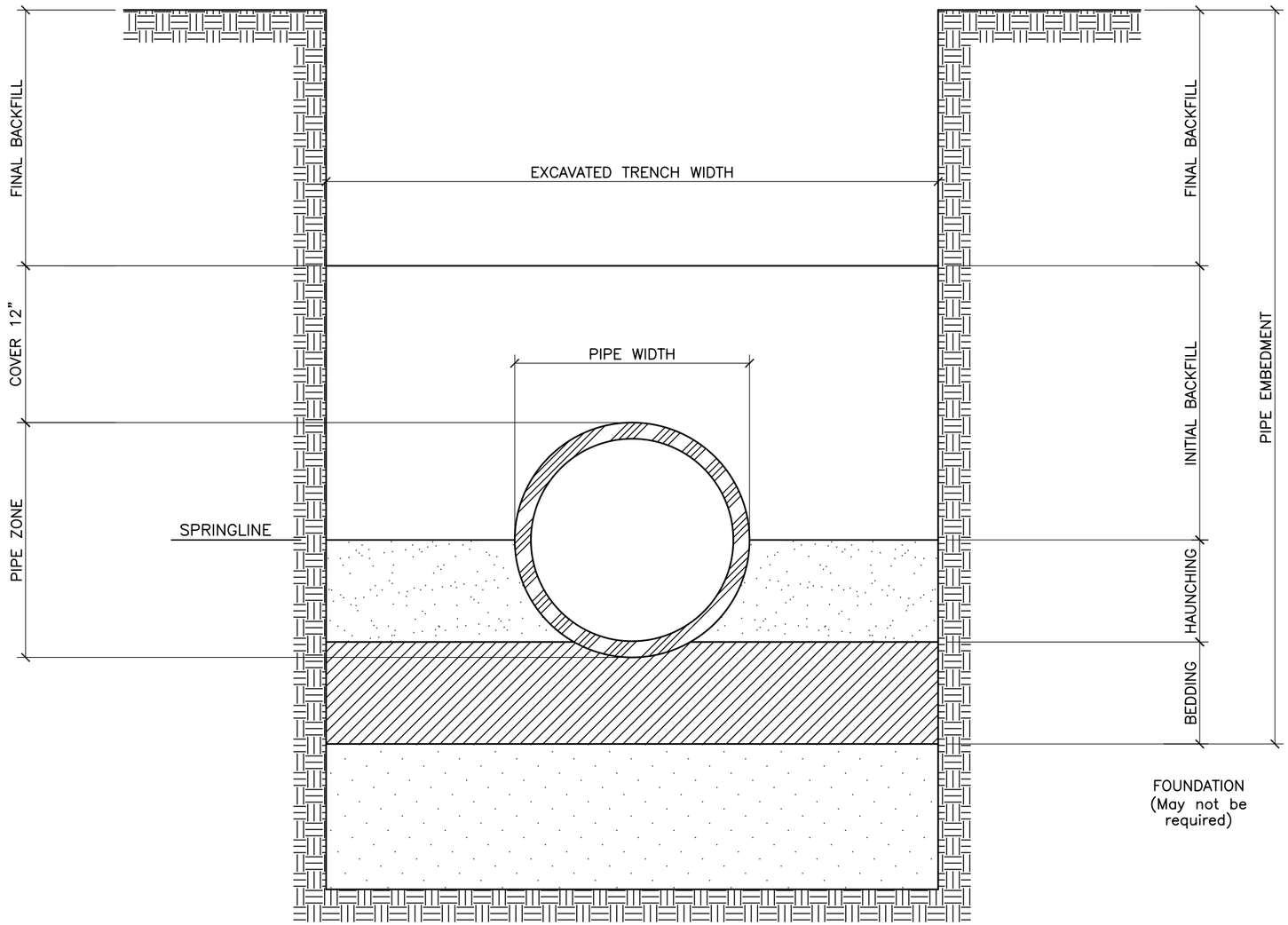

TRENCH CROSS-SECTION
SHOWING TERMINOLOGY

REVISIONS	CITY OF ALBUQUERQUE
	WATER PIPE TRENCH TERMINOLOGY
	DWG. 2315 JANUARY 2003

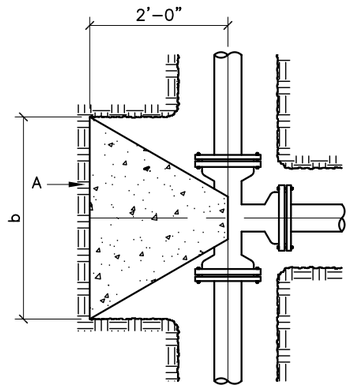

PLAN

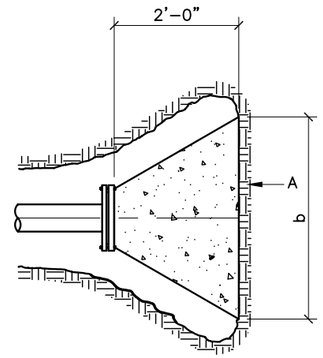

PLAN

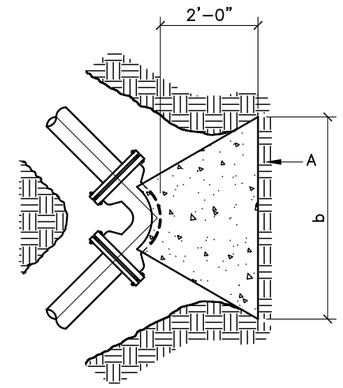

PLAN

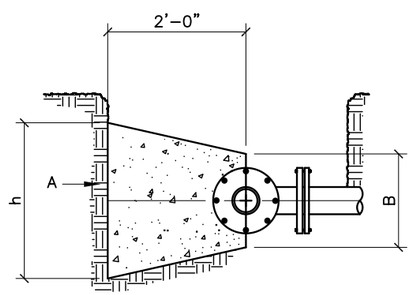

ELEVATION
CONCRETE BLOCKING
FOR TEE

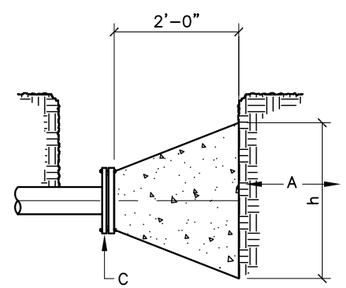

ELEVATION
CONCRETE BLOCKING
FOR PLUG OR CAP

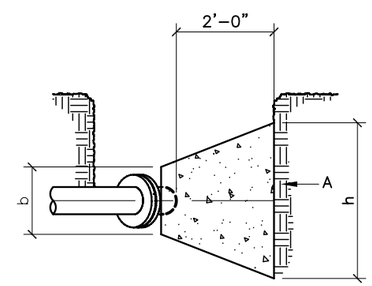

ELEVATION
CONCRETE BLOCKING
FOR ELBOW

GENERAL NOTES:

1 ALL THRUST CONTROL BY RESTRAINED JOINTS ONLY UNLESS DIRECTED BY ENGINEER.

2 PIPE SIZE GREATER THAN 14" REQUIRES DESIGN BY ENGINEER TO BE SUBMITTED TO THE CITY FOR APPROVAL.

3 CONCRETE BLOCKING PER SEC. 101 EXTERIOR CONCRETE, f'c=3500 psi @ 28 DAYS.

PIPE SIZE	ELBOW ANGLE	ELBOW (b) DIM.	ELBOW (h) DIM.	TEE OR PLUG (b) DIM.	TEE OR PLUG (h) DIM.
4"				2'	1'
4"	90° 45°	2'	2'		
4"	22 1/2° 11 1/4°	2'	2'		
6"				2'	2'
6"	90° 45°	2'	2'		
6"	22 1/2° 11 1/4°	2'	2'		
8"				3'	3'
8"	90°	3'	3'		
8"	45°	2'	2'		
8"	22 1/2° 11 1/4°	2'	2'		
10"				3'	3'
10"	90°	3'-6"	3'-6"		
10"	45°	3'	3'		
10"	22 1/2° 11 1/4°	2'	2'		
12"				3'-6"	3'-6"
12"	90°	4'	4'		
12"	45°	3'-6"	3'-6"		
12"	22 1/2° 11 1/4°	2'	2'		
14"				4'	4'
14"	90°	5'	5'		
14"	45°	3'-6"	3'-6"		
14"	22 1/2° 11 1/4°	3'	3'		

CONSTRUCTION NOTES:

A UNDISTURBED EARTH.

B O.D. OF PIPE + 8".

C O.D. OF CAP OR PLUG, MIN. 12"x12".

REVISIONS	CITY OF ALBUQUERQUE
	WATER CONCRETE BLOCKING DESIGN
	DWG. 2320 JANUARY 2003

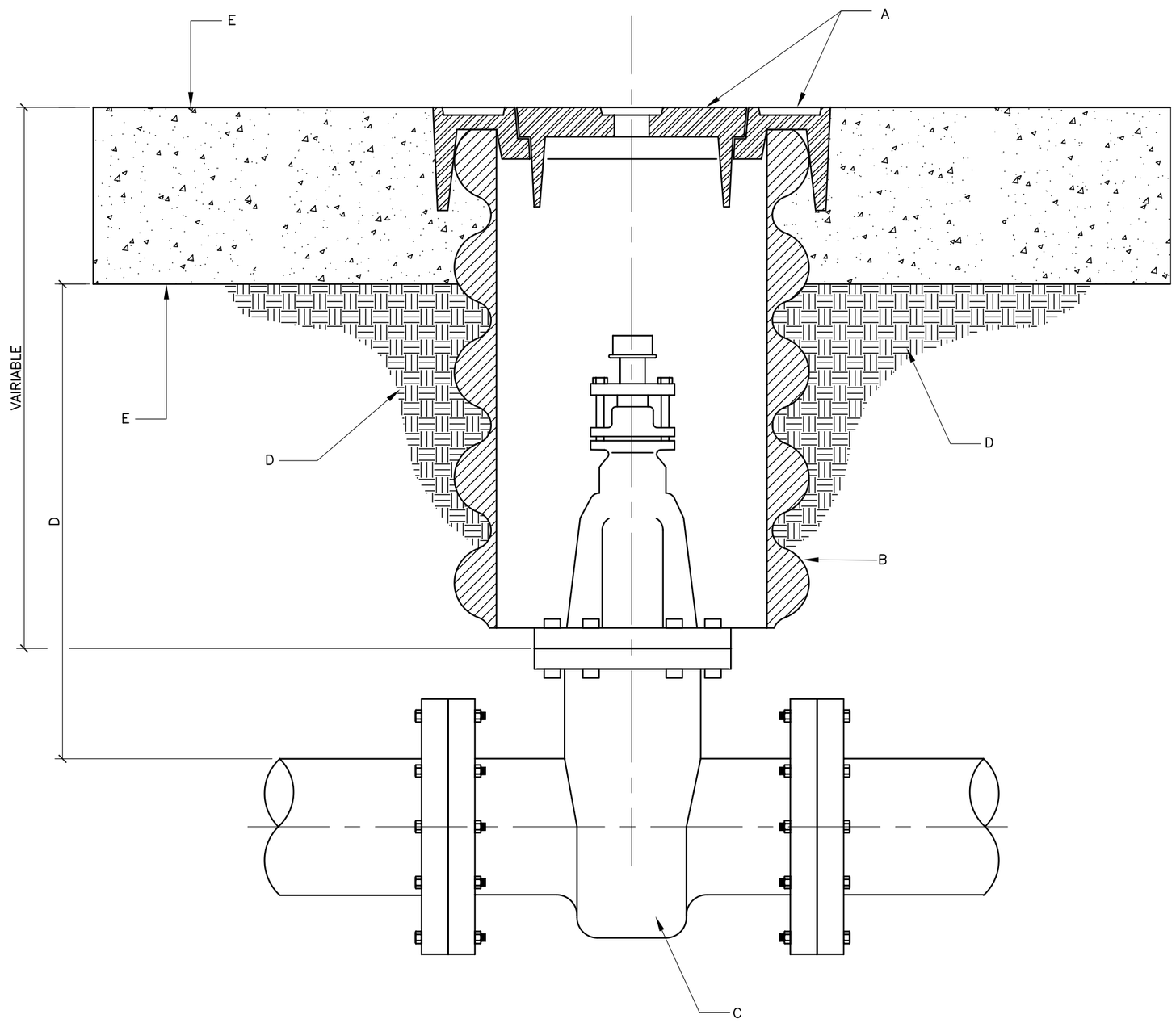

GENERAL NOTES:

A VALVE BOX RING AND COVER PER C.O.A. STD. DWG. 2328.

B 10" DIAMETER RIBBED OR CORRUGATED PVC OR PE PIPE WITH SMOOTH INTERIOR (C–900).

C NEW OR EXISTING VALVE.

D COMPACTED BACKFILL. SOIL OR BASE COURSE MATERIAL (95% COMPACTION). SEE SECTION 701.

E CONCRETE COLLAR PER C.O.A. STD. DWG. 2461.

F TOP OF CONCRETE COLLAR SHALL BE STAMPED WITH LINE SIZE AND DIRECTION. MINIMUM LETTER SIZE SHALL BE 3" IN HEIGHT.

G MIN. 6" OR MATCH EXISTING.

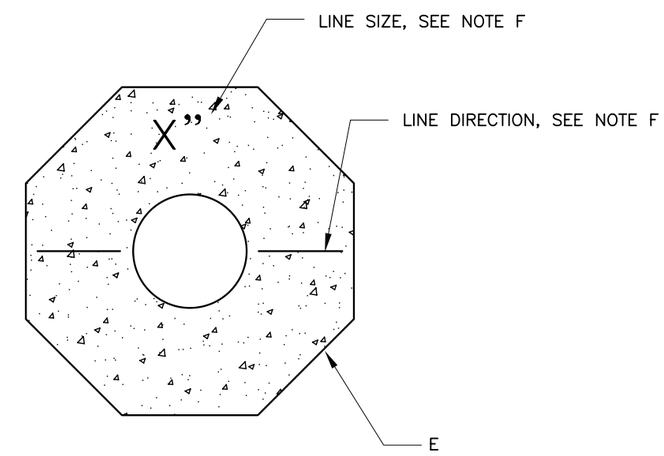

LABEL REQUIREMENTS

REVISIONS	CITY OF ALBUQUERQUE
	WATER VALVE BOX
	DWG. 2326 JANUARY 2003

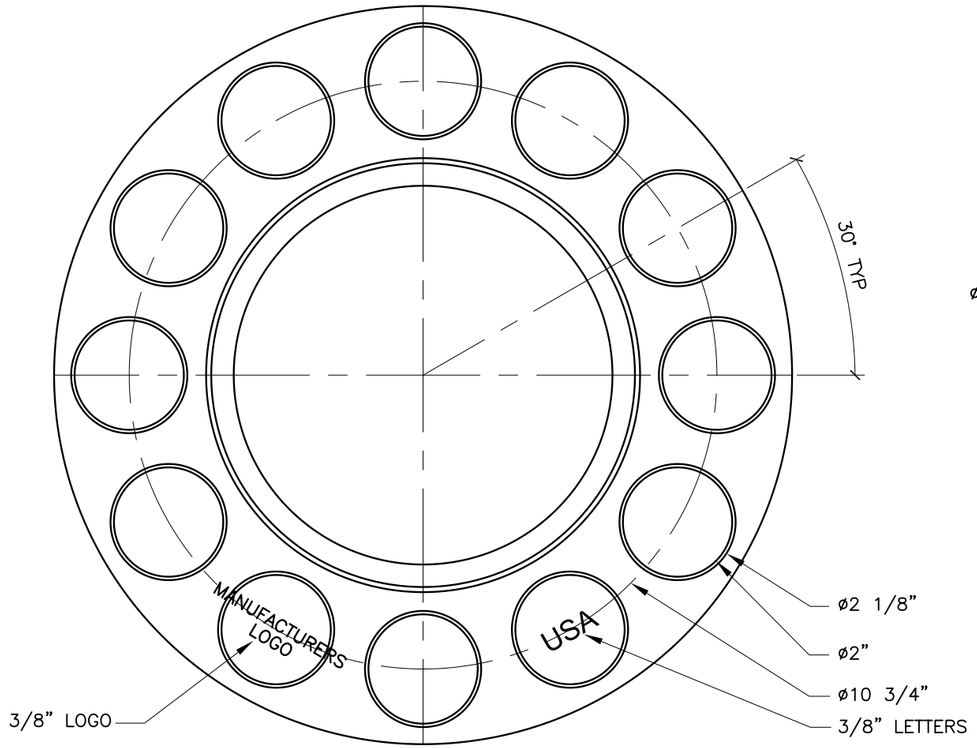

TOP VIEW

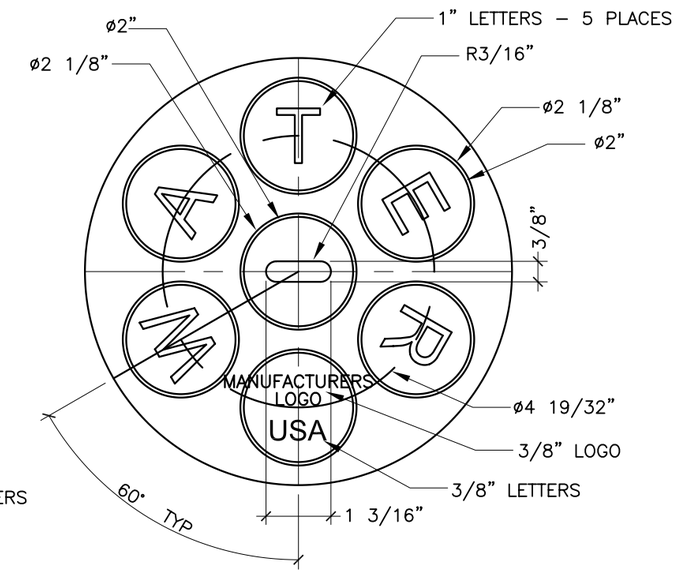

TOP VIEW

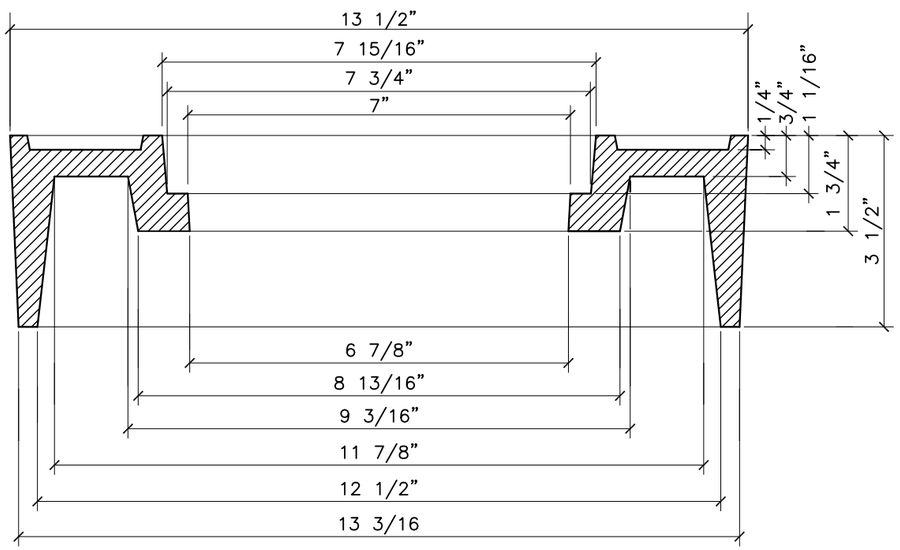

SECTION

VALVE BOX RING

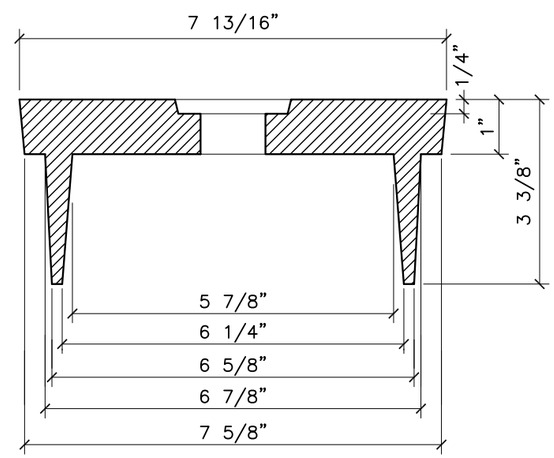

SECTION

VALVE BOX COVER

GENERAL NOTES – RING

1. ALBUQUERQUE VALVE BOX RING DESIGNED TO ACCEPT AN ALBUQUERQUE VALVE BOX COVER.
2. THE CASTING NUMBER, MANUFACTURER'S LOGO, DATE OF MANUFACTURE AND "USA" SHALL BE CAST IN A CONSPICUOUS LOCATION ON BOTH THE RING AND THE COVER.
3. FILLETS SHALL BE 1/4"R UNLESS OTHERWISE SPECIFIED.
4. A DRAFT ANGLE OF 3°–5° SHALL BE APPLIED UNLESS OTHERWISE SPECIFIED.
5. FINISH: REMOVE EXCESS IRON AND FINS.
6. THIS DETAIL DOES NOT APPLY FOR VALVE BOX RING AND COVER TO BE USED ON REUSE OR NON–POTABLE WATER SYSTEMS.

GENERAL NOTES – COVER

1. ALBUQUERQUE VALVE BOX COVER DESIGNED TO FIT INTO AN ALBUQUERQUE VALVE BOX RING.
2. THE CASTING NUMBER, MANUFACTURER'S LOGO, DATE OF MANUFACTURE AND "USA" SHALL BE CAST IN A CONSPICUOUS LOCATION ON BOTH THE RING AND THE COVER.
3. FILLETS SHALL BE 1/4"R UNLESS OTHERWISE SPECIFIED.
4. A DRAFT ANGLE OF 3°–5° SHALL BE APPLIED UNLESS OTHERWISE SPECIFIED.
5. FINISH: REMOVE EXCESS IRON AND FINS.

REVISIONS	CITY OF ALBUQUERQUE
	WATER RING AND COVER FOR VALVE BOX
	DWG. 2328 JANUARY 2003

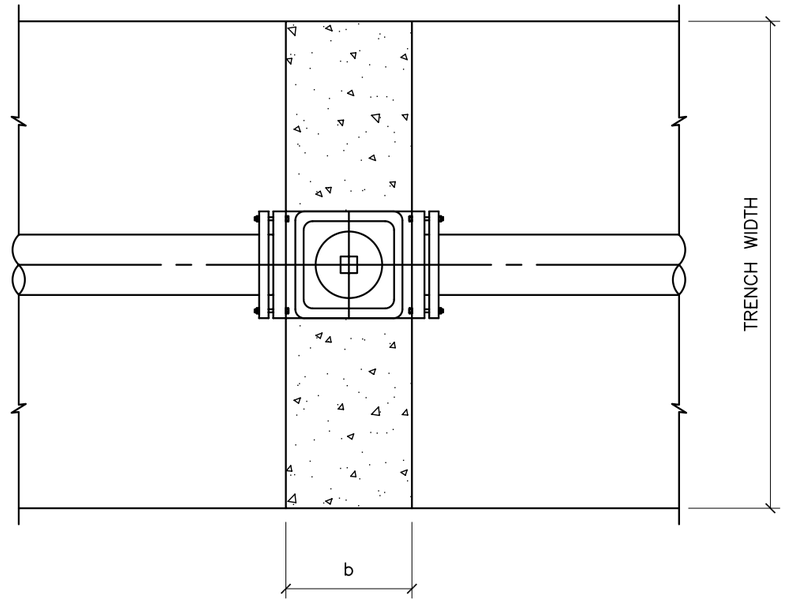

PLAN

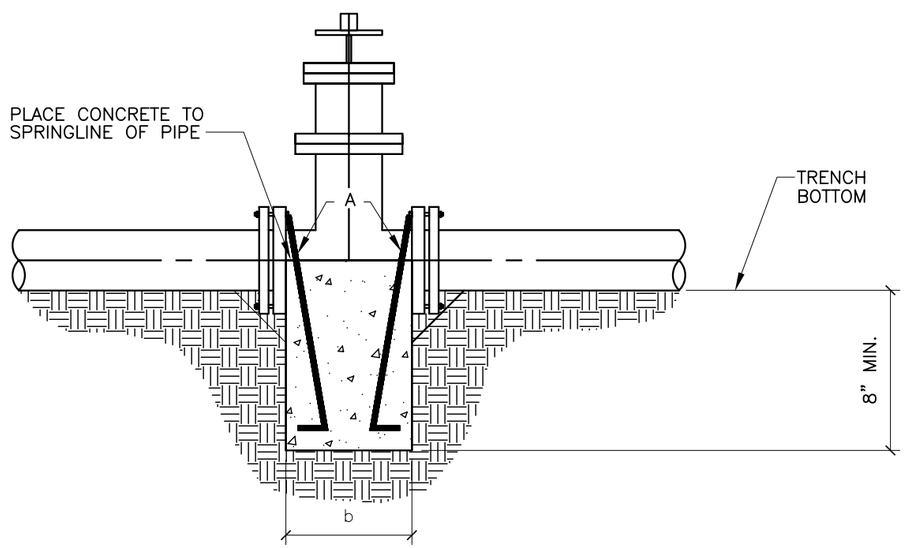

SECTION

GENERAL NOTES:

1 THE ENGINEER SHALL PROVIDE DESIGN FOR ALL VALVES GREATER THAN 12".

2 ALL THRUST CONTROL BY RESTRAINED JOINTS ONLY UNLESS OTHERWISE DIRECTED BY ENGINEER.

3 USE FOR VALVE INSERTION INTO EXISTING LINES ONLY.

4 CONCRETE USED FOR VALVE ANCHORAGE PER SEC. 101 HYDRAULIC STRUCTURAL CONCRETE, f'c=4000 psi @ 28 DAYS.

CONSTRUCTION NOTES:

A TWO NO. 4 BARS FOR VALVE STRAPS WITH 3" HOOKS. HOOKS TO BE EMBEDDED BELOW BOTTOM OF PIPE. BARS TO BE COATED WITH BITUMINOUS MATERIAL TO PREVENT CORROSION.

PIPE SIZE	DIM. b
6"	8"
8"	9"
10"	10"
12"	10"

REVISIONS	CITY OF ALBUQUERQUE
	WATER WATER VALVE INSERTION ANCHORAGE DWG. 2333 JANUARY 2003

GENERAL NOTES:

1. VALVE VAULT SHALL NOT BE USED IN GROUND WATER CONDITIONS OR IN CLAY SOILS.
2. CONCRETE SHALL MEET SPECIFICATION SEC. 510 AND SEC. 101 HYDRAULIC STRUCTURAL CONCRETE, f'c = 4000 psi. REINFORCING SHALL BE GRADE 60.
3. DESIGN EQUIVALENT FLUID PRESSURE = 91.2 pcf, K = .5
4. BACKFILL MATERIAL SHALL BE CLASS II OR III IN ACCORDANCE WITH SPECIFICATION SEC. 501.
5. PIPE DIAMETER VARIES FROM 24" DIA. TO 48" DIA.
6. PIPELINE CENTERLINE IN THE HORIZONTAL PLANE IS FIXED. ASSOCIATED VALVE BOXES ADJUST IN LOCATION DUE TO PIPE SIZE. FIELD VERIFY THESE MEASUREMENTS.
7. PIPELINE VERTICAL CENTERLINE IS ADJUSTABLE WITH THE MINIMUM OF 18" BELOW PIPELINE AS THE ONLY LIMIT.
8. HOLD CENTERLINE OF TAP LOCATIONS AND CENTER OF BUTTERFLY VALVE.

CONSTRUCTION NOTES:

A TAPPING SADDLE (D.I.P. OR C.C.P.) OR FLANGED OUTLETS (C.C.P.).
B 6" GATE VALVE WITH BLIND FLANGE (24" TO 30").
8" GATE VALVE WITH BLIND FLANGE (36" TO 48").
C 2'-0" DIA. MANHOLE FRAME & COVER. COVER MARKED "WATER".
D MANHOLE STEPS PER SPEC. SECTION 920.4.7
E VALVE BOX, RING & COVER PER DWG. 2328.
F LINK SEAL OR EQUAL.
G "MEGA-FLANGE" ADAPTER, EBAA OR EQUAL.
H DUCTILE IRON PIPE (FLxPE).
I AWWA C504 BUTTERFLY VALVE (FL).
J 2" COMBINATION AIR AND VACUUM VALVE W/ ISOLATION VALVE.
K #8 @ 7 1/2" O.C.x10'-4". ADD BAR EACH SIDE OF OPENING.
L #6 @ 6" O.C.x7'-0 1/2". ADD BAR EACH SIDE OF OPENING.
M 4-#5 DIAGONALS AT EACH OPENING.
N #5 @ 12" O.C.x10'-4". FIELD CUT AT OPENINGS.
P #5 DIAGONALSx6'-0". BEND AS REQUIRED.
Q #5 @ 12" O.C.x3'-1 1/2". FIELD CUT AT OPENINGS.
R 5" CONCRETE TOPPING SLAB WITH #4@6" O.C. EACH WAY. SPREAD BARS AT OPENINGS.
S #5 @ 6" O.C. HORIZ.x10'-4" WITH 10" HOOKS EACH END.
T #4 @ 12" O.C. VERT. x 8'-10".
U #5 FOOTING DOWELS @ 6" O.C. WITH 10" HOOK.
V #6 @ 6" O.C.x11'-8" EACH WAY TOP & BOTTOM.
W 2-#5 DIAGONALSx7'-0". BEND AS REQUIRED. (8 TOTAL EACH WALL)
X 2-#6x10'-4" TOP & BOT. OF PIPE. PLACE OUTSIDE OF DIAGONALS.
Y 2x4 KEY TYPICAL.
Z 30# FELT MASTIC
AA 2-#9x10'-4"
AB #4 TIES @ 5 1/2" O.C. 1st TIE 1 3/4" FROM FACE OF WALL.
AC 2-#5x10'-4"
AD BLOCK OUT WALL FOR BEAM.
AE COIL INSERT WITH 8000# CAPACITY EACH. PROVIDE GREASED BOLT AND ASPHALT OVER CONNECTION. PROVIDE SINGLE SWIVEL LIFT PLATES. WIRE TIE TO BOTTOM LADDER RUNG.
AF PROVIDE COIL INSERT "AE" ABOVE IN 10" SLAB. PROVIDE PVC POCKET THROUGH 5" TOPPING SLAB. INSERT BOLT & FILL WITH ASPHALT.
AG 8"ø HOLE WITH GRAVEL FILL. PROVIDE 1/2" C.Y. GRAVEL FILL BELOW FOUNDATION.
AH BUTT STRAP TYP.
AJ ADJUSTABLE PIPE SUPPORT.
AK STEEL PIPE (FLxPE). COAT ALL EXPOSED STEEL SURFACES WITH BITUMASTIC COATING.

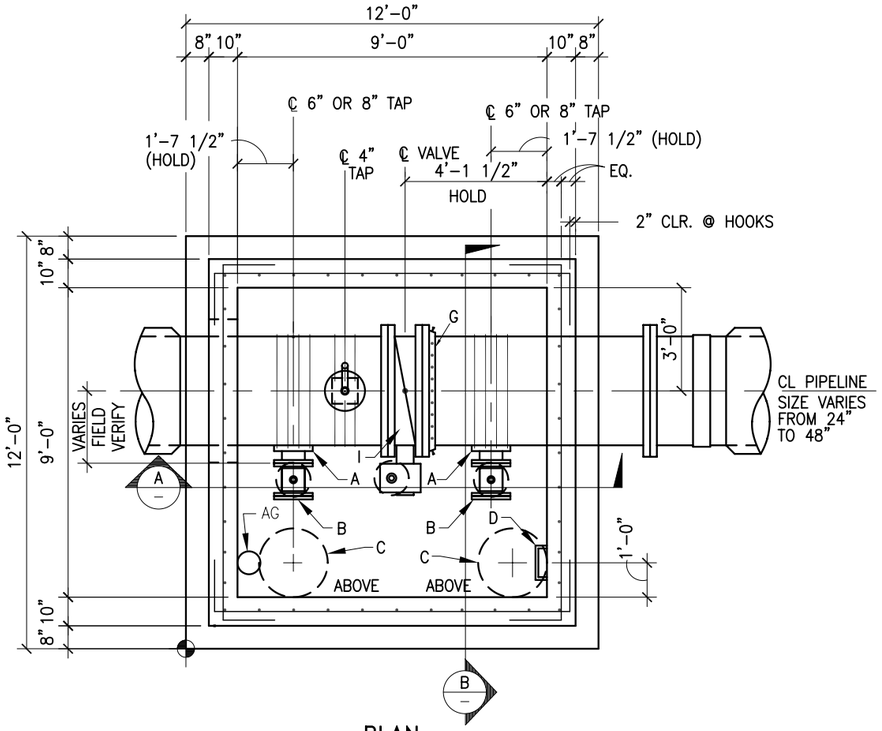

PLAN

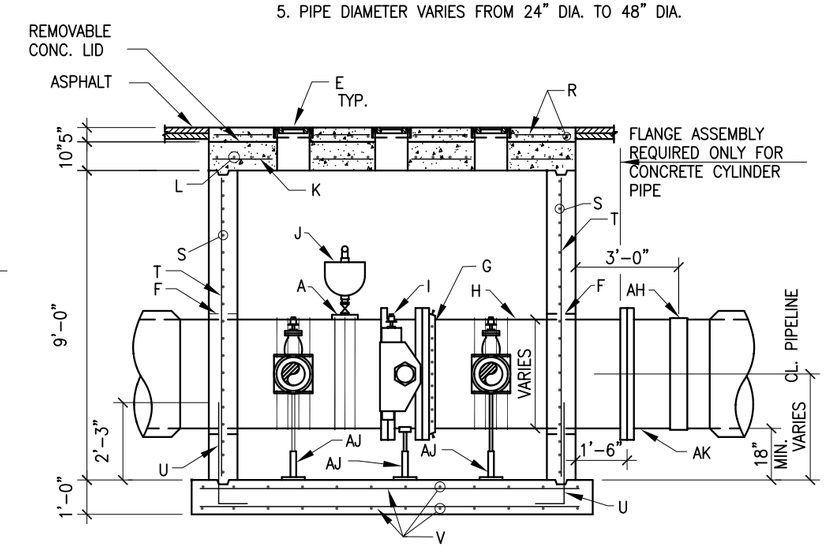

SECTION A

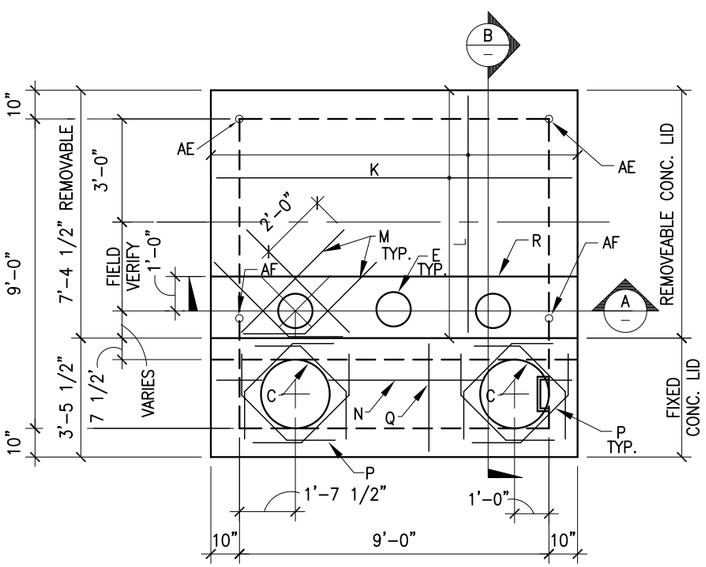

REMOVABLE LID PLAN

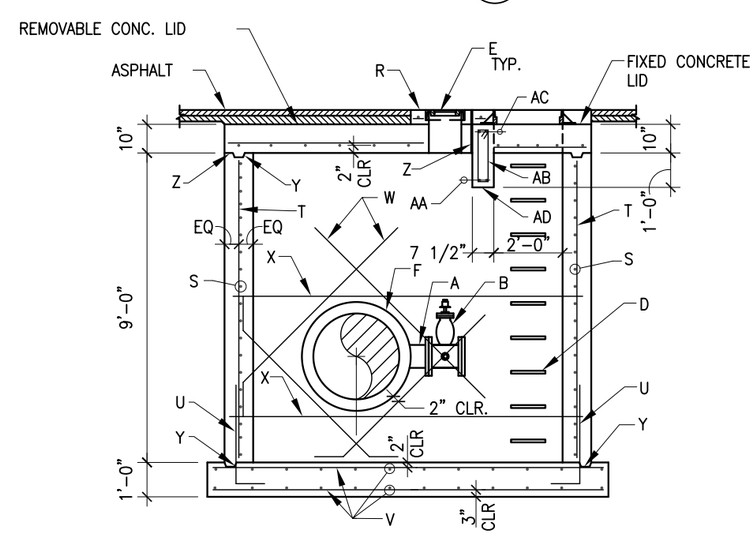

SECTION B

VAULT ORIENTATION ON CONSTRUCTION DRAWINGS

REVISIONS	CITY OF ALBUQUERQUE
	WATER LARGE DIAMETER VALVE VAULT
	DWG. 2334 JANUARY 2003

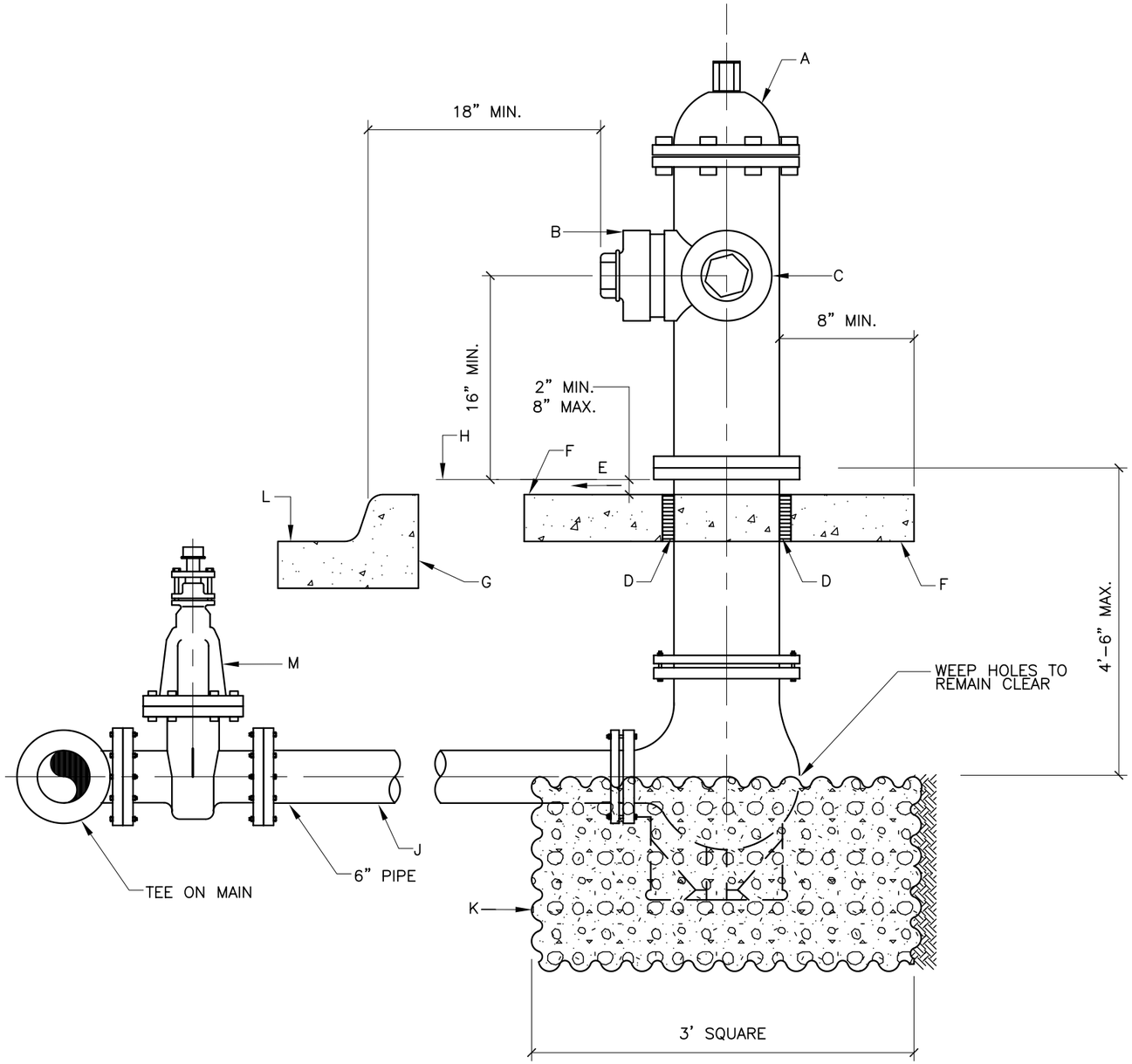

GENERAL NOTES:

1 NO OBSTRUCTIONS WILL BE PERMITTED WITHIN 3'-0" OF FIRE HYDRANT.

2 HYDRANT LEG SHALL BE VALVED FROM MAINS 10" DIAMETER AND LARGER AND IN ARTERIAL STREETS LOCATED IN COMMERCIAL AREAS.

3 CONTRACTOR SHALL BE RESPONSIBLE FOR SETTING TOP FLANGE OF FIRE HYDRANT TO THE CONTROLLED ELEVATION LINE.

4 FOR FIRE HYDRANT LOCATIONS, SEE DWG. 2347.

5 WHEN NEW OR EXISTING SIDEWALK ABUTS CURB, RECONSTRUCT SIDEWALK PER DWG. 2430, 2431.

6 PUMPER NOZZLE TO BE SET FACING THE TRAVELED WAY, UNLESS OTHERWISE NOTED ON PLANS.

7 HYDRANTS INSTALLED IN SIDEWALK AREAS SHALL MAINTAIN A MIN. 36-INCH CLEAR PEDESTRIAN PATH PER ADA STANDARD.

CONSTRUCTION NOTES:

A FIRE HYDRANT PER SPECIFICATIONS.

B PUMPER NOZZLE 4 1/2".

C HOSE NOZZLE 2 1/2".

D 1/2" EXPANSION JOINT MATERIAL.

E MATCH SIDEWALK SLOPE OR SLOPE 1/4" PER FOOT.

F 3'x3'x6" CONCRETE SQUARE PAD, TO BE CONSTRUCTED AROUND FIRE HYDRANT'S CENTER LINE WHEN NOT LOCATED WITHIN SIDEWALK OR CONCRETE AREA. CONCRETE PER SEC. 101 EXTERIOR CONCRETE, f'c=3500 psi @ 28 DAYS.

G BACK OF CURB.

H CONTROLLED ELEVATION LINE, LEVEL IN ALL DIRECTIONS.

J USE OF RESTRAINED JOINTS IS MANDATORY. ALL FIRE HYDRANT LEG PIPING AND FITTINGS INCLUDING TEE ON MAIN SHALL BE RESTRAINED JOINT.

K GRAVEL DRAIN POCKET, COVER TOP SURFACE WITH TAR PAPER. ASTM C33, NO. 57 GRAVEL.

L STANDARD CURB AND GUTTER. FOR OTHER TYPES OF CURB AND GUTTER, OR WHERE NO CURB AND GUTTER EXIST, THE PLACEMENT OF FIRE HYDRANT REQUIRES SPECIAL DESIGN.

M IF VALVE IS REQUIRED, VALVE WILL BE CONNECTED TO TEE AT MAIN PER C.O.A. STANDARDS.

REVISIONS	CITY OF ALBUQUERQUE
	WATER FIRE HYDRANT INSTALLATION DWG. 2340 JANUARY 2003

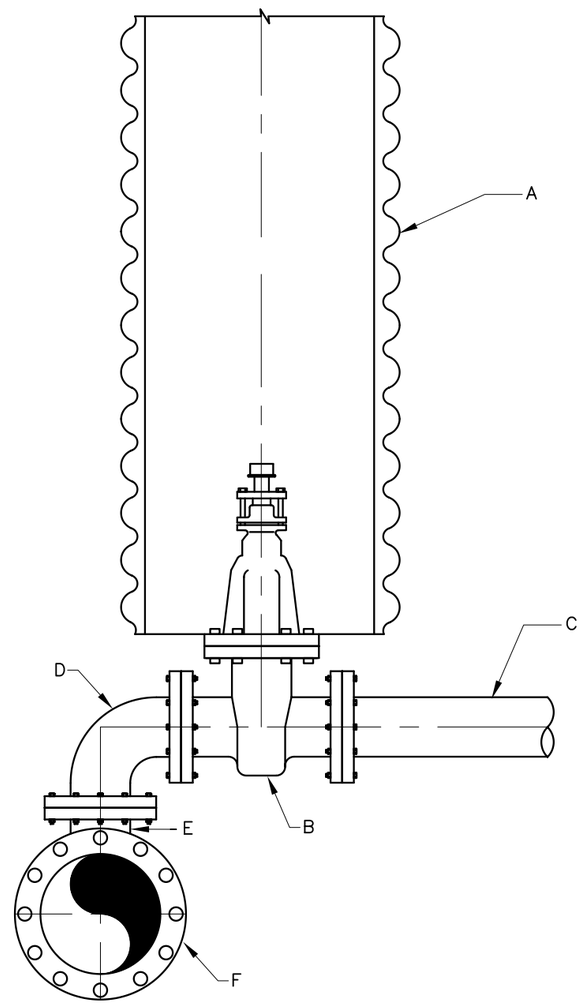

GENERAL NOTES:

1 INSTALL AS REQUIRED BY CONSTRUCTION PLANS.

CONSTRUCTION NOTES:

A VALVE BOX PER C.O.A. STD. DWG. 2326.

B GATE VALVE FL.– FL.

C WATER LINE TO AIR RELEASE IN SIDEWALK.

D C.I./D.I. FL. 90° BEND.

E FL. OUTLET OR C.I./D.I. TEE.

F WATER MAIN.

REVISIONS	CITY OF ALBUQUERQUE
	WATER AIR RELEASE CONNECTION DWG. 2344 JANUARY 2003

GENERAL NOTES:

1 FIRE HYDRANTS ARE NOT TO BE LOCATED WITHIN THE CURB RETURN AREA. FIRE HYDRANTS LOCATED IN THE MID BLOCK LENGTH SHALL BE CENTERED ON ADJOINING PROPERTY LINES.

2 A MINIMUM CLEARANCE OF 3' SHALL BE PROVIDED BETWEEN FIRE HYDRANT AND ANY PERMANENT OBSTRUCTION (UTILITY POLE, LIGHT STANDARD, TRAFFIC SIGNAL, ETC.).

3 FOR FIRE HYDRANT INSTALLATION DETAILS SEE DWG. 2340.

CONSTRUCTION NOTES:

A FIRE HYDRANT

B RIGHT-OF-WAY OR EASEMENT LINE

C PROPERTY LINE

D PERMANENT OBSTRUCTION

E PARKWAY

F SIDEWALK

G PC OR PT OF CURB RETURN

H MAINTAIN A MINIMUM CLEARANCE OF 3' RADIUS FROM CENTER OF HYDRANT TO ANY AND ALL OBSTRUCTIONS.

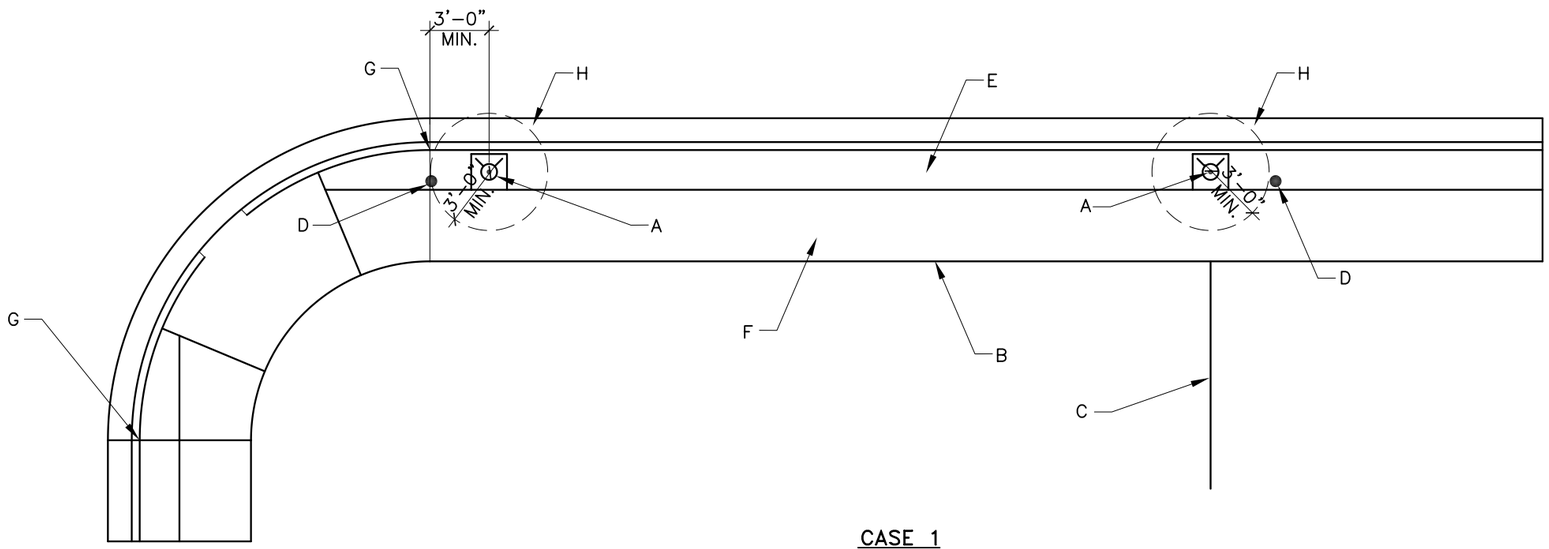

CASE 1

(WITH PARKWAY BEHIND CURB AND GUTTER)

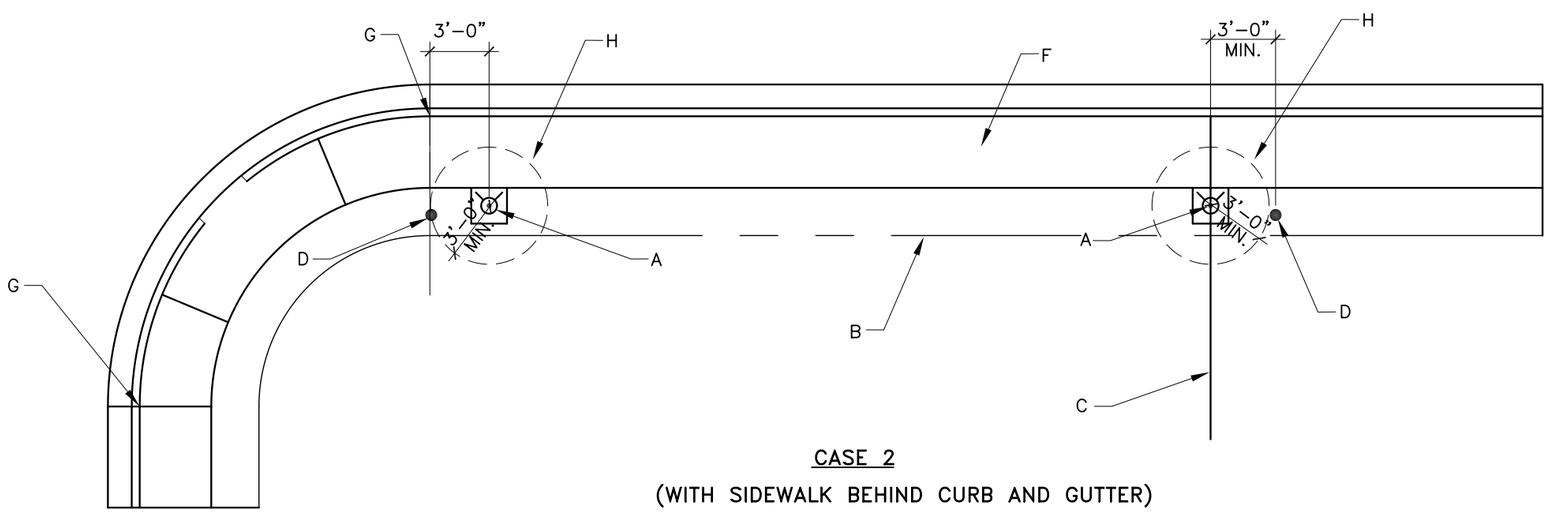

CASE 2

(WITH SIDEWALK BEHIND CURB AND GUTTER)

REVISIONS	CITY OF ALBUQUERQUE
	WATER DETAILS ON TYPICAL FIRE HYDRANT LOCATIONS DWG. 2347 JANUARY 2003

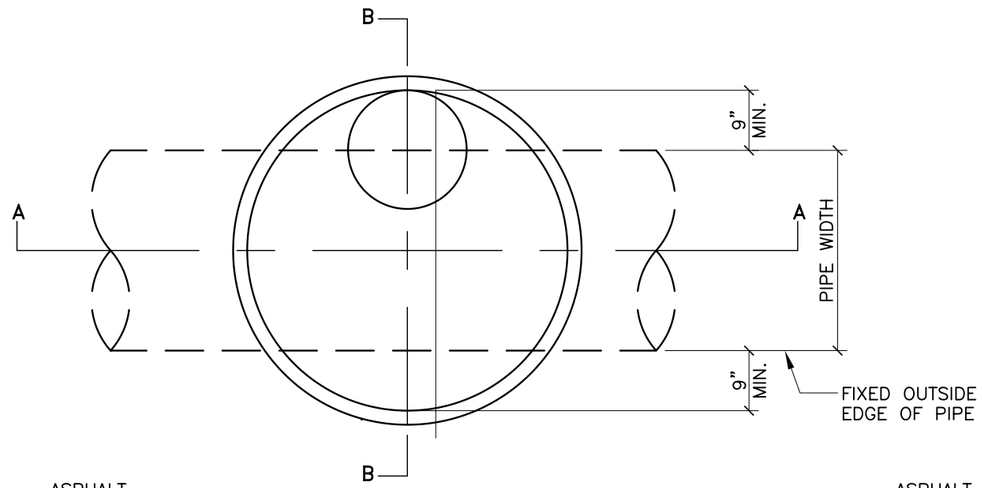

PLAN

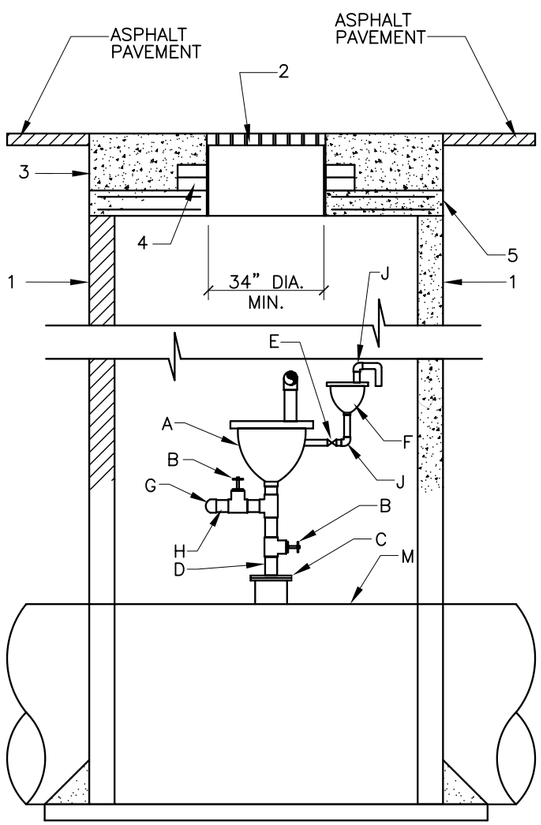

SECTION A–A

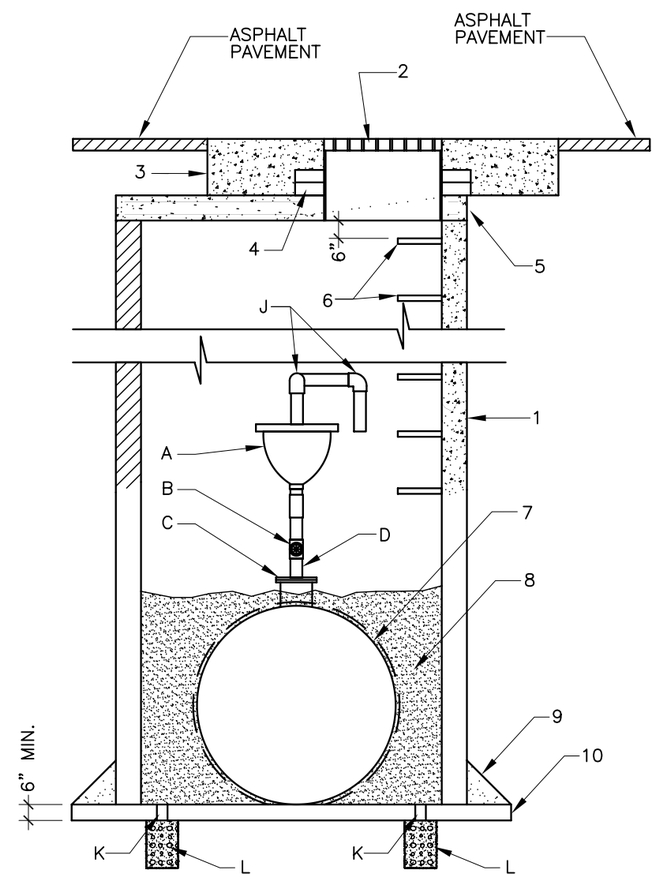

SECTION B–B

MATERIALS LIST

NOTE: ALL PIPING AND FITTINGS SHALL BE SCH. 40 THREADED GALVANIZED STEEL. SIZE IS DETERMINED BY SPECIFIC AIR/VACUUM RELEASE VALVE TO BE INSTALLED.

A COMBINATION AIR AND VACUUM RELEASE VALVE, SIZE AS SHOWN ON PLAN.

B GATE VALVE, SAME SIZE AS COMBINATION AIR AND VACUUM RELEASE VALVE INLET.

C MINIMUM 6" FLANGE NOZZLE OR FLANGE TAPPING SADDLE. PROVIDE BLIND FLANGE TAPPED FOR THREADED NIPPLE WHERE AIR/VAC VALVE IS SHOWN TO BE LESS THAN 6".

D CAST IRON NIPPLE.

E 1" BALL VALVE.

F 1" AIR RELEASE VALVE.

G THREADED CAP.

H THREADED NIPPLE FOR VENT AND HOSE CONNECTION.

J 90° ELBOW.

K 4" DIA. SCHEDULE 40 PVC PIPE SLEEVE THROUGH MANHOLE BASE.

L 12"x12"x18" DEEP 1" CLEAN GRAVEL. ASTM C33, NO. 57 GRAVEL.

M WATER MAIN.

CONSTRUCTION NOTES:

1 MANHOLE MAY BE CONSTRUCTED OF CONCRETE BLOCK, GR, MS BRICK, POURED CONCRETE, OR PRECAST REIN–FORCED CONCRETE. IF BLOCK OR BRICK, PLASTER INSIDE AND OUT WITH 1/2" MORTAR. SEE DWG 2101.

2 USE 36" MH FRAME AND COVER. COVER MARKED "WATER".

3 CONCRETE COLLAR PER C.O.A. STD. DWG. 2461.

4 USE ADJUSTMENT RINGS OR MAX. 2 COURSES GR MS BRICK FOR ADJUSTMENT OF MH FRAME TO PAVEMENT GRADE.

5 PRECAST CONCRETE COVER. SEE DWG 2107, EXCEPT OPENING SHALL BE 34" DIAMETER MINIMUM.

6 STEPS TO BE INSTALLED PER STD SPEC SEC 920.

7 CUT MANHOLE TO PROVIDE A 4" CLEARANCE AROUND WATER MAIN

8 1" CLEAN GRAVEL TO TOP OF MAIN.

9 6" GROUT FILLET AROUND BASE

10 CONCRETE BASE TO BE POURED IN PLACE USING #4 BARS AT 12" OC EACH WAY.

REVISIONS	CITY OF ALBUQUERQUE
	WATER AIR/VACUUM RELEASE VALVE
	DWG. 2350 JANUARY 2003

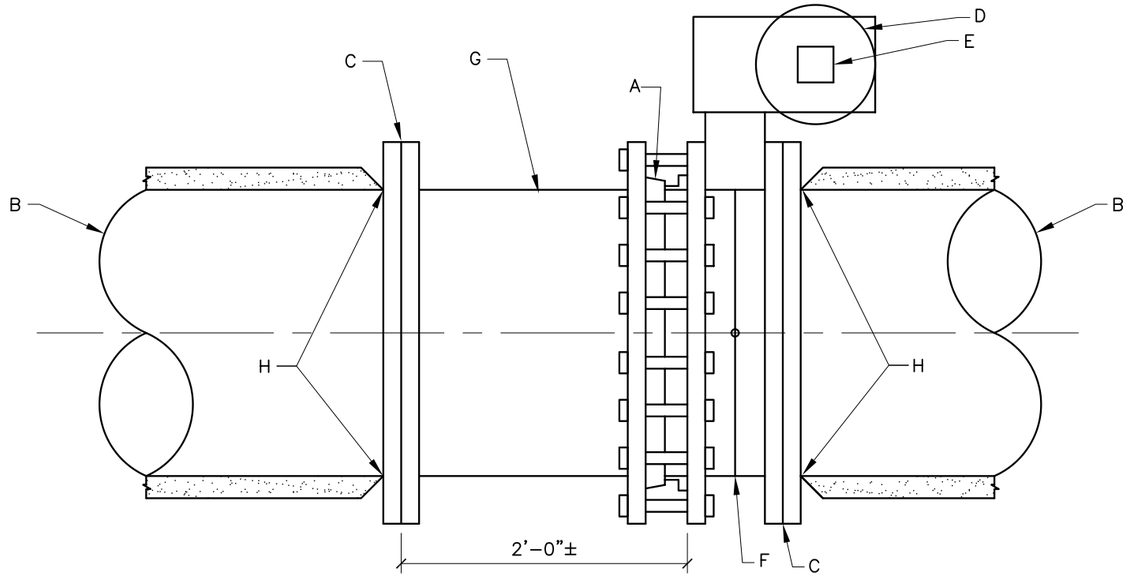

PLAN

BUTTERFLY VALVE INSTALLATION DETAIL IN NEW C.C.P. PIPELINE

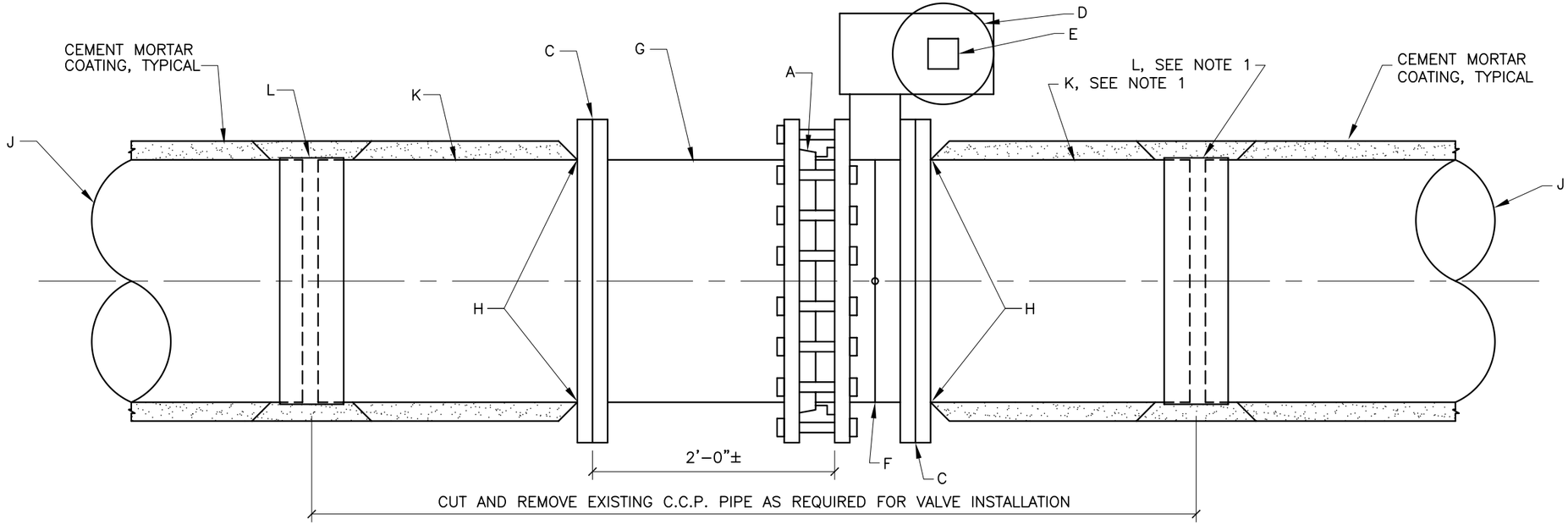

PLAN

BUTTERFLY VALVE INSTALLATION DETAIL IN EXISTING C.C.P. PIPELINE

GENERAL NOTES:

1 2'-0" LONG STEEL SPOOL AND BUTTSTRAP OMITTED IF EXISTING FLANGE EXISTS AT NEW VALVE LOCATION.

CONSTRUCTION NOTES:

A MEGA FLANGE – FLANGE ADAPTOR, SERIES 2100 AS MANUFACTURED BY EBAA IRON SALES, OR APPROVED EQUAL.

B MAIN PIPELINE (C.C.P) WITH FLANGED END.

C INSULATING FLANGE KIT.

D VALVE BOX AND COVER PER STD. DWG 2328.

E 3" SQUARE OPERATING NUT.

F BUTTERFLY VALVE (FLGxFLG), SIZE AS SHOWN ON DRAWINGS.

G DUCTILE IRON SPOOL (FLGxPE).

H COAT ALL EXPOSED STEEL SURFACES WITH BITUMASTIC.

J EXISTING C.C.P. PIPE.

K 2'-0" LONG STEEL SPOOL (FLGxPE)

L BUTTSTRAP.

REVISIONS	CITY OF ALBUQUERQUE WATER CONC. CYL. BUTTERFLY VALVE INSTALLATION DETAILS
	DWG. 2351 JANUARY 2003

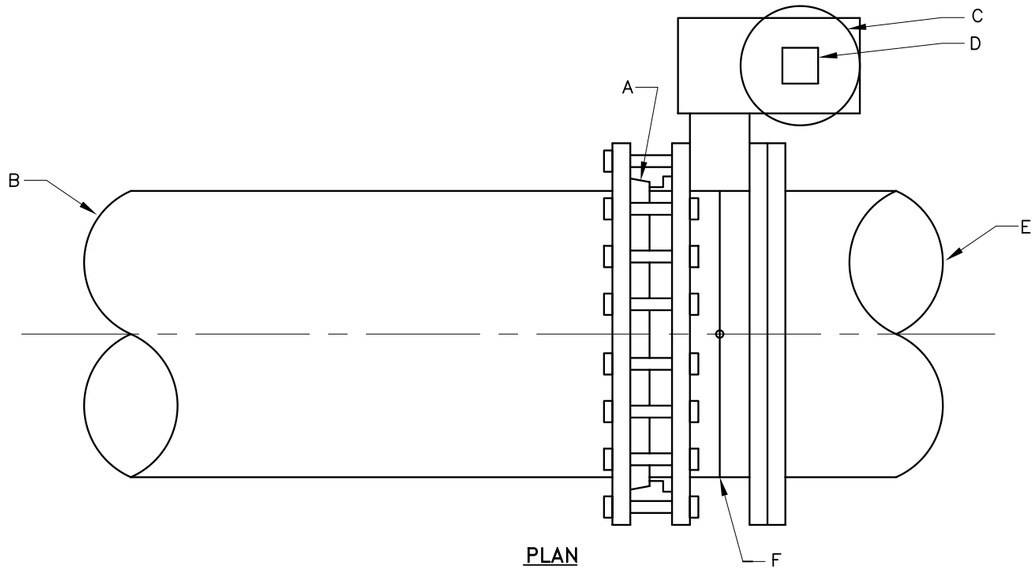

PLAN

BUTTERFLY VALVE INSTALLATION DETAIL IN NEW D.I. PIPELINE

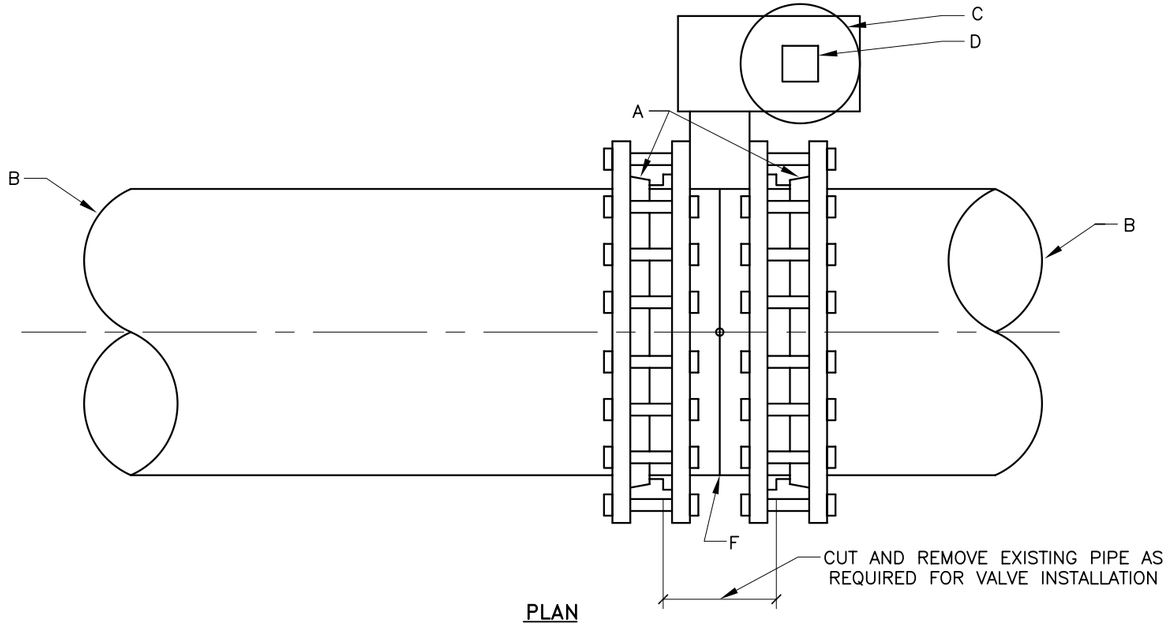

PLAN

BUTTERFLY VALVE INSTALLATION DETAIL IN EXISTING D.I. PIPELINE

CONSTRUCTION NOTES:

1 THIS DETAIL IS TO BE USED FOR NEW OR EXISTING DUCTILE IRON PIPE ONLY. WHERE EXISTING PIPE IS OF CAST IRON MATERIALS, VALVE INSTALLATION DETAILS SHALL BE SUBMITTED TO AND APPROVED BY THE WATER UTILITY DIVISION.

CONSTRUCTION NOTES:

A MEGA FLANGE – FLANGE ADAPTER, SERIES 2100 AS MANUFACTURED BY EBAA IRON SALE, OR APPROVED EQUAL.

B MAIN PIPELINE (D.I.) WITH PLAIN END.

C VALVE BOX AND COVER PER C.O.A. STD. DWG 2328.

D 3" SQUARE OPERATING NUT.

E MAIN PIPELINE (D.I.) WITH FLANGED END.

F BUTTERFLY VALVE (FLGxFLG), SIZE AS SHOWN ON DRAWINGS.

REVISIONS	CITY OF ALBUQUERQUE
	WATER DUCTILE IRON BUTTERFLY VALVE INSTALLATION DETAILS DWG. 2352 JANUARY 2003

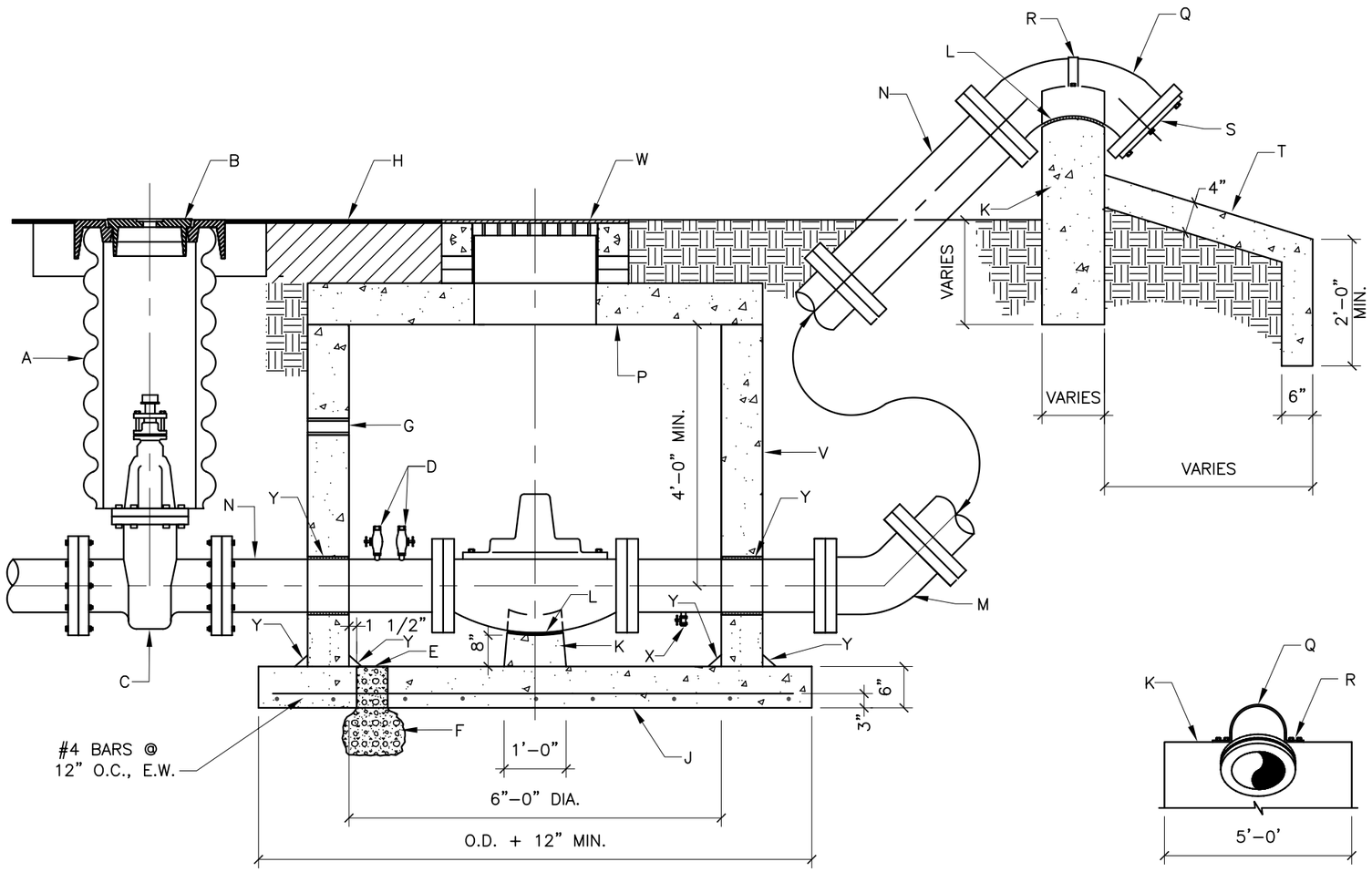

ELEVATION
TYPICAL

FRONT VIEW

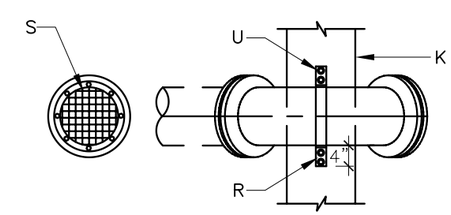

PIPE OUTLET PLAN VIEW

ANCHOR DETAILS

GENERAL NOTES:

1 SIZE, ELECTRIC AND MECHANICAL APPURTENANCES AND OUTLET DISCHARGE POINT AS REQUIRED BY THE WATER UTILITY DIVISION.

CONSTRUCTION NOTES:

A VALVE BOX PER C.O.A. STD. DWG. 2326.

B VALVE BOX RING AND COVER PER C.O.A. STD. DWG. 2328.

C GATE VALVE (FL. – FL.).

D 1/2" CONNECTIONS WITH PETCOCK FOR PRESSURE MEASURING DEVICES.

E 6" DIAMETER FLOOR DRAIN HOLE THROUGH SLAB.

F 1/2 CU. YD. COARSE GRAVEL, ASTM C33, NO. 57 GRAVEL.

G 2" SLEEVE FOR CONDUIT.

H PAVEMENT.

J REINFORCED CONCRETE SLAB, SLOPE TO DRAIN. CONCRETE PER SEC. 101, HYDRAULIC STRUCTURAL CONCRETE, f'c=4000 psi @ 28 DAYS.

K REINFORCED CONCRETE PEDESTAL. CONCRETE PER SEC. 101, EXTERIOR CONCRETE, f'c=3500 psi @ 28 DAYS.

L 30 LB. FELT BETWEEN FITTING OR VALVE AND PEDESTAL.

M C.I./D.I. 45° ELL. (FL. – FL.).

N C.I./D.I. PIPE (FL. – FL.).

P PRECAST CONCRETE COVER, SEE DWG. 2107, EXCEPT OPENING SHALL BE 34" DIAMETER MINIMUM.

Q C.I./D.I. 90° ELL. (FL. – FL.).

R ANCHOR STRAPS 3/8"x2".

S COVER OPENING WITH 1/2" HARDWARE CLOTH, SECURE TO END OF ELL WITH 6– 3/8"x2" BOLTS, NUTS, AND WASHERS.

T CONCRETE SPLASH PAD TO BE DESIGNED FOR EACH SITE. CONCRETE PER SEC. 101, EXTERIOR CONCRETE, f'c=3500 psi @ 28 DAYS.

U 4– 5/8"x10" ANCHOR BOLTS.

V 6'–0" DIA. TYPE "C" MANHOLE, PER C.O.A. STD. DWG. 2101.

W 36" MANHOLE FRAME AND COVER, THE COVER IS TO BE MARKED "WATER".

X 1" TAP AND VALVE FOR DRAIN.

Y NON–SHRINK GROUT.

REVISIONS	CITY OF ALBUQUERQUE
	WATER
	SURGE RELIEF VALVE STATION
	DWG. 2353 JANUARY 2003

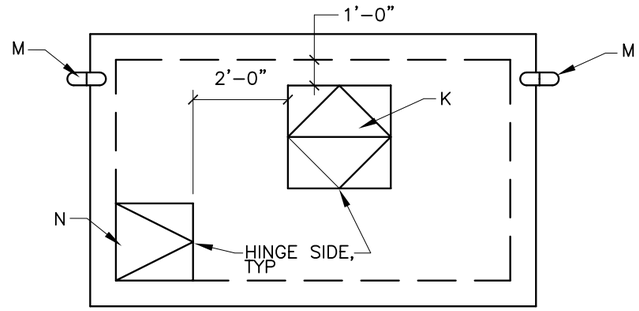

TOP PLAN

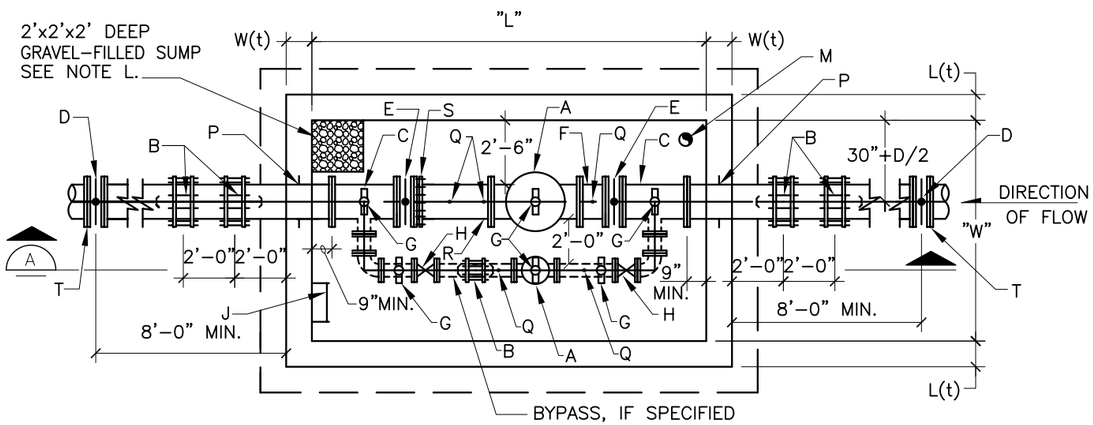

INTERIOR PLAN

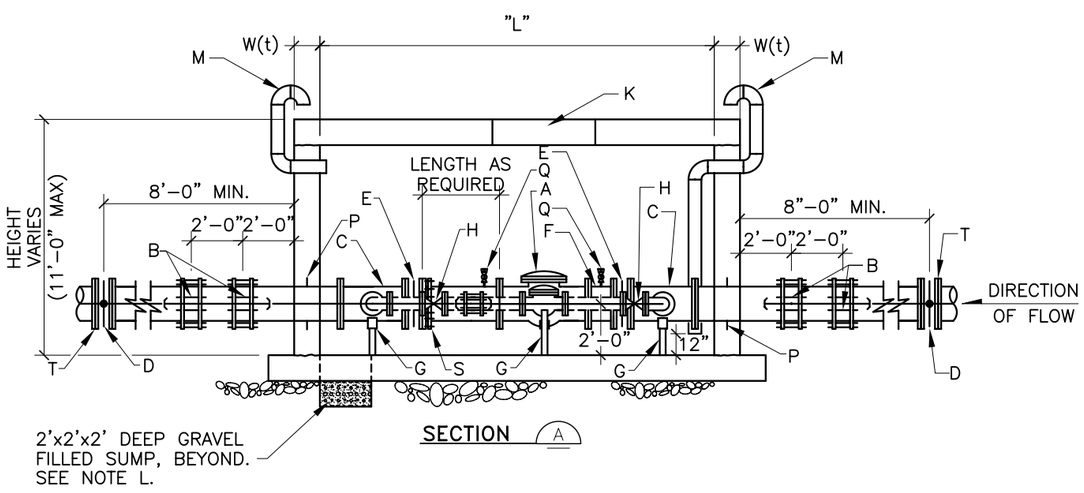

SECTION A

GENERAL NOTES:

1. FOR STRUCTURAL DETAILS, VAULT DIMENSIONS AND REINFORCING SEE STANDARD PRV STATION STRUCTURAL DETAILS DWG. 2357.

CONSTRUCTION NOTES:

1. PRV LOCATION, FINAL DESIGN AND LAYOUT SHALL BE APPROVED BY THE WATER UTILITY DIVISION TO CONFORM WITH SPECIFIC SYSTEM AND SITE REQUIREMENTS.
2. PRV STATION ACCESS OPENING COVERS SHOWN ON THIS STANDARD DETAIL ARE SUITABLE FOR LOCATIONS NOT EXPOSED TO CONTINUOUS HIGH DENSITY TRAFFIC. IF PRV STATION MUST BE LOCATED IN AREAS OF CONTINUOUS HIGH DENSITY TRAFFIC THE ACCESS OPENING COVERS SHALL BE SPECIFICALLY DESIGNED TO WITHSTAND THE CONDITIONS AND LOADINGS TO BE ENCOUNTERED.
3. ALUMINUM FLOOR DOORS AND FRAME FOR LOCATIONS SUBJECT TO INTERMITTENT AND LIGHT DENSITY TRAFFIC SHALL BE DESIGNED TO WITHSTAND A LIVE LOAD OF THE AASHTO H–20 DESIGNATION AND SHALL BE FLUSH WITH TOP OF VAULT.
4. ALUMINUM FLOOR DOORS AND FRAMES FOR LOCATIONS OUT OF ROADWAYS AND NOT SUBJECT TO TRAFFIC LOADINGS SHALL BE DESIGNED TO WITHSTAND A LIVE LOAD OF 300 POUNDS PER SQUARE FOOT AND SHALL EXTEND 3–INCHES MINIMUM ABOVE TOP OF VAULT.
5. 6–INCH VENT PIPING SHALL BE ROUTED SUCH THAT THE ABOVE GROUND GOOSENECK AND INSECT SCREEN ARE LOCATED OUT OF VEHICULAR OR PEDESTRIAN TRAFFIC AREAS.

A PRESSURE REDUCING VALVE, AS SPECIFIED

B FLEXIBLE COUPLING WITH THRUST TIES, SEE THRUST TIE DETAIL ON DWG. 2358

C FLANGED TEE, REQUIRED ONLY IF BYPASS SPECIFIED

D BURIED BUTTERFLY VALVE (GATE VALVE FOR SIZE < 14")

E BUTTERFLY VALVE WITH HAND WHEEL OPERATOR (GATE VALVE FOR SIZE < 8"), REQUIRED ONLY WHEN BYPASS IS SPECIFIED.

F FLANGED SPOOL, LENGTH = 1'–0"

G ADJUSTABLE PIPE SADDLE SUPPORT, GRINNELL FIG. 264, ELCEN FIG. 50 OR EQUAL, TYPICAL

H GATE VALVE WITH HAND WHEEL OPERATOR, REQUIRED ONLY IF BYPASS SPECIFIED

J 1'–6" WIDE ALUMINUM LADDER W/LADDER UP SAFETY POST PER OSHA STANDARDS.

K ALUMINUM FLOOR DOOR WITH RECESSED HASP COVERED BY A HINGED LID FLUSH WITH TOP SURFACE. DOOR SIZE SHALL BE 4'x4' DOUBLE LEAF (WITHOUT BYPASS) AND 4'x6' DOUBLE LEAF (WITH BYPASS). HARDWARE AND HINGES SHALL BE 304 STAINLESS STEEL. BILCO TYPE JD, OR EQUAL.

L GRAVEL PER ASTM C33, NO. 57 GRAVEL.

M 6" STEEL PIPE W/GOOSENECK AND INSECT SCREEN

N 3'–0" SQ ALUMINUM FLOOR DOOR WITH RECESSED HASP COVERED BY A HINGED LID FLUSH WITH TOP SURFACE. HARDWARE AND HINGES SHALL BE 304 STAINLESS STEEL. BILCO TYPE J, OR EQUAL.

P WALL PIPE WITH THRUST COLLAR, CENTER IN WALL

Q 1/2" PIPE TAP WITH 1/2" BALL VALVE AND CAP

R D.I. SPOOL FLG. x P.E.

S MEGA FLANGE – FLANGE ADAPTER, AS MANUFACTURED BY EBAA IRON SALES, OR APPROVED EQUAL.

T INSULATING FLANGE KIT.

REVISIONS	CITY OF ALBUQUERQUE
	WATER STANDARD PRV STATION NO METER
	DWG. 2354 JANUARY 2003

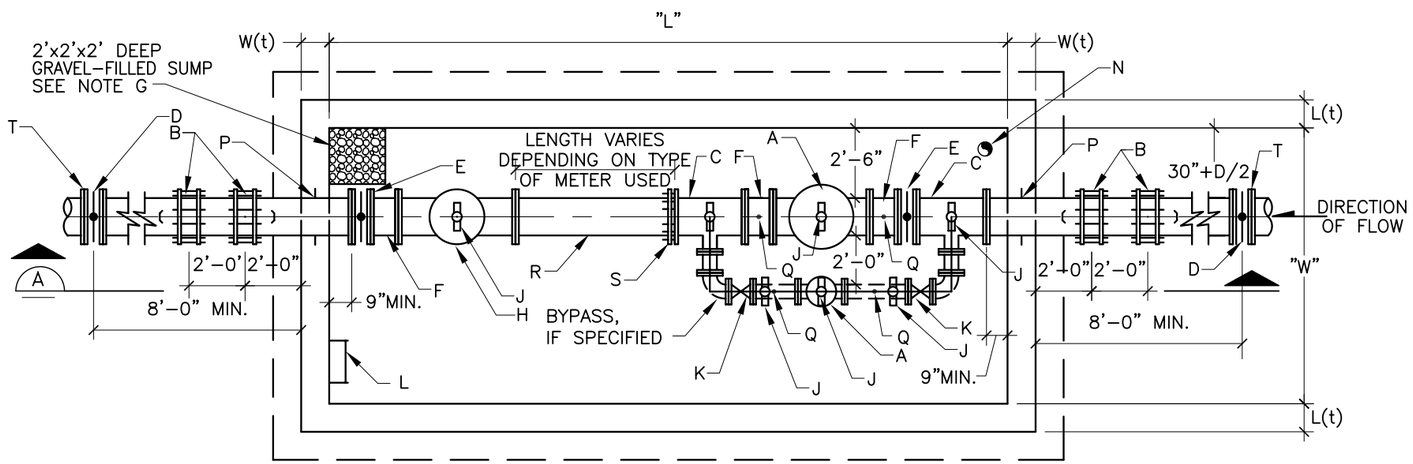

INTERIOR PLAN

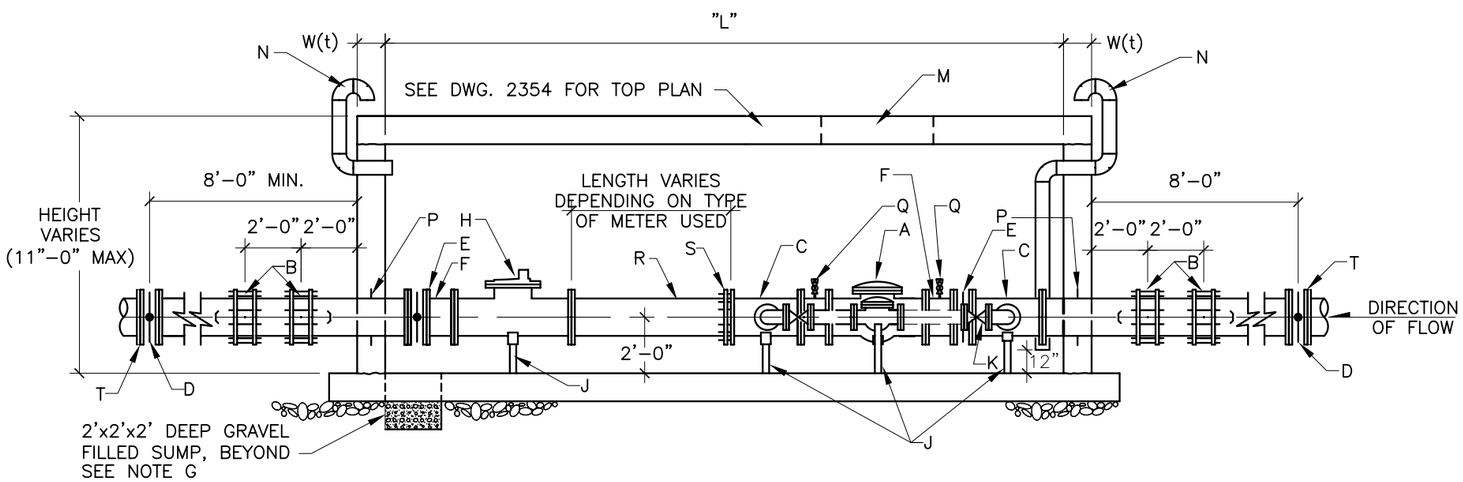

SECTION A

GENERAL NOTES:

1. FOR STRUCTURAL DETAILS, VAULT DIMENSIONS AND REINFORCING SEE STANDARD PRV STATION STRUCTURAL DETAILS DWG. 2357
2. SEE STANDARD PRV STATION,NO METER, DWG. 2354 FOR ADDITIONAL CONSTRUCTION NOTES.

CONSTRUCTION NOTES:

- A PRESSURE REDUCING VALVE, AS SPECIFIED
- B FLEXIBLE COUPLING WITH THRUST TIES, SEE THRUST TIE DETAIL ON DWG 2358.
- C FLANGED TEE, REQUIRED ONLY IF BYPASS SPECIFIED
- D BURIED BUTTERFLY VALVE (GATE VALVE FOR SIZE < 14")
- E BUTTERFLY VALVE WITH HAND WHEEL OPERATOR (GATE VALVE FOR SIZE < 8"), REQUIRED ONLY WHEN BYPASS SPECIFIED
- F FLANGED SPOOL, LENGTH = 1'-0"
- G ASTM C33, NO. 57 GRAVEL.
- H PROPELLER TYPE FLOW METER, SPARLING MODEL PDS-102 OR EQUAL, COMPLETE WITH TUBE, SADDLE AND STRAIGHTENING VANES.
- J ADJUSTABLE PIPE SADDLE SUPPORT, GRINNEL FIG. 264, ELCEN FIG. 50, OR EQUAL.
- K GATE VALVE WITH HAND WHEEL OPERATOR, REQUIRED ONLY IF BYPASS SPECIFIED
- L 1'-6" WIDE ALUMINUM LADDER W/LADDER UP SAFETY POST PER OSHA STANDARDS.
- M ALUMINUM FLOOR DOOR WITH RECESSED HASP COVERED BY A HINGED LID FLUSH WITH TOP SURFACE. DOOR SIZE SHALL BE 4'x4' DOUBLE LEAF (WITHOUT BYPASS) AND 4'x6' DOUBLE LEAF (WITH BYPASS). HARDWARE AND HINGES SHALL BE 304 STAINLESS STEEL. BILCO TYPE JD, OR EQUAL.
- N 6" STEEL PIPE W/GOOSENECK AND INSECT SCREEN
- P WALL PIPE WITH THRUST COLLAR, CENTER IN WALL
- Q 1/2" PIPE TAP WITH 1/2" BALL VALVE AND CAP
- R D.I. SPOOL FLG. x P.E.
- S MEGA FLANGE – FLANGE ADAPTOR, AS MANUFACTURED BY EBAA IRON SALES, OR APPROVED EQUAL.
- T INSULATING FLANGE KIT.

REVISIONS	CITY OF ALBUQUERQUE WATER STANDARD PRV STATION WITH PROPELLER METER DWG. 2355 JANUARY 2003

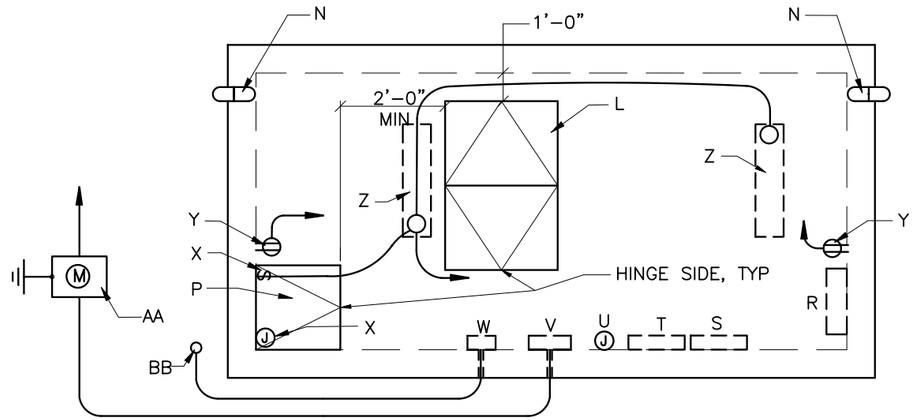

TOP PLAN

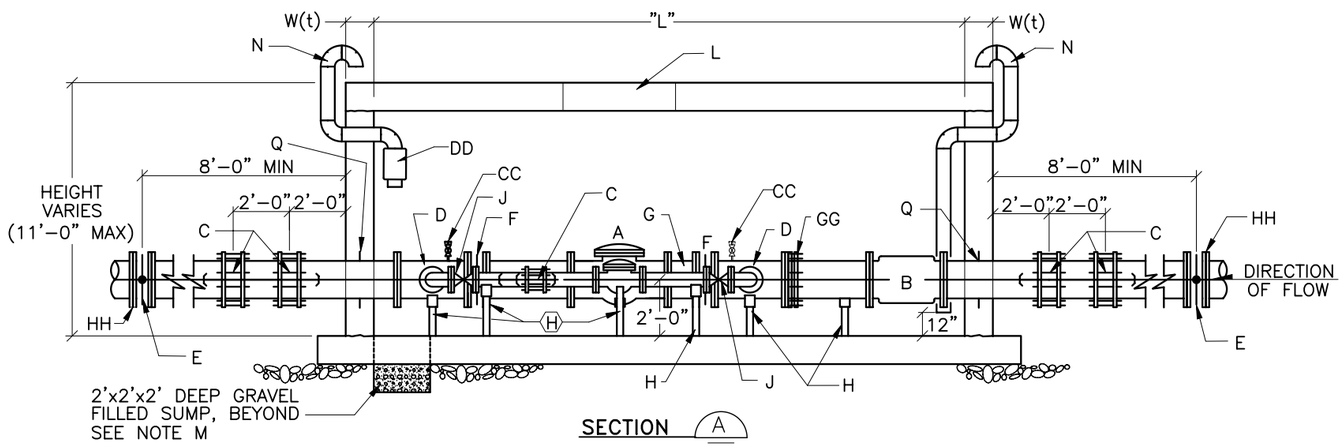

SECTION A

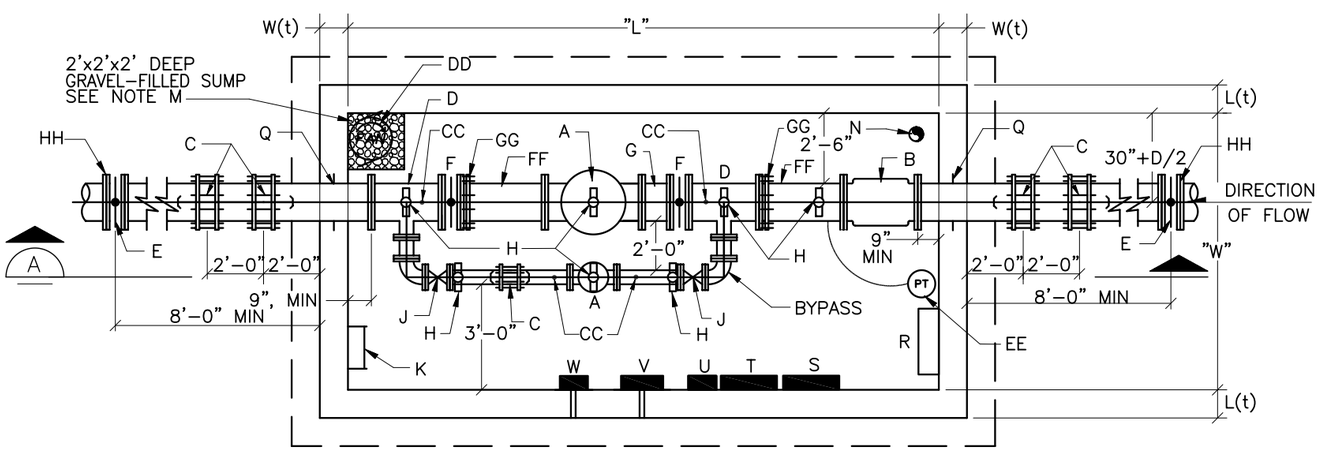

INTERIOR PLAN

GENERAL NOTES:

1. FOR STRUCTURAL DETAILS, VAULT DIMENSIONS AND REINFORCING SEE STANDARD PRV STATION STRUCTURAL DETAILS DWG. 2357.
2. SEE STANDARD PRV STATION NO METER, DWG. 2354 FOR ADDITIONAL CONSTRUCTION NOTES.

CONSTRUCTION NOTES:

A	PRESSURE REDUCING VALVE, AS SPECIFIED
B	MAGNETIC FLOW METER, KROHNE M940/960, OR AS APPROVED BY THE WATER UTILITY DIVISION, COMPLETE WITH SIGNAL CONVERTER
C	FLEXIBLE COUPLING WITH THRUST TIES, SEE THRUST TIE DETAIL ON DWG. 2358.
D	FLANGED TEE
E	BURIED BUTTERFLY VALVE (GATE VALVE FOR SIZE < 14")
F	BUTTERFLY VALVE (GATE VALVE FOR SIZE < 8")
G	FLANGED SPOOL, LENGTH = 1'-0"
H	ADJUSTABLE PIPE SADDLE SUPPORT, GRINNELL FIG. 264, ELCEN FIG. 50 OR EQUAL
J	GATE VALVE
K	1'-6" WIDE ALUMINUM LADDER W/LADDER UP SAFETY POST PER OSHA STANDARDS.
L	ALUMINUM FLOOR DOOR WITH RECESSED HASP COVERED BY A HINGED LID FLUSH WITH TOP SURFACE. DOOR SIZE SHALL BE 4'x6' DOUBLE LEAF. HARDWARE AND HINGES SHALL BE TYPE 304 STAINLESS STEEL. BILCO TYPE JD OR EQUAL.
M	GRAVEL PER ASTM C33, NO. 57 GRAVEL.
N	6" STEEL PIPE W/GOOSENECK AND INSECT SCREEN
P	3'-0" SQ ALUMINUM FLOOR DOOR WITH RECESSED HASP COVERED BY A HINGED LID FLUSH WITH TOP SURFACE. HARDWARE AND HINGES SHALL BE TYPE 304 STAINLESS STEEL. BILCO TYPE J OR EQUAL.
Q	WALL PIPE WITH THRUST COLLAR, CENTER IN WALL
R	RCP CABINET FURNISHED BY THE CITY OF ALBUQUERQUE
S	POWER SUPPLY AND TERMINAL CABINET
T	FLOW INDICATING TRANSMITTER
U	WEATHERPROOF JUNCTION BOX FOR CONNECTION OF VAULT FLOOD LEVEL ELEMENT
V	100 AMP, 120/240 VOLT, SINGLE PHASE THREE WIRE CIRCUIT BREAKER PANEL
W	RADIO AND TELEMETRY EQUIPMENT FURNISHED BY THE CITY OF ALBUQUERQUE
X	WEATHERPROOF JUNCTION BOXES FOR CONNECTION TO TWO POLE MICROSWITCH FOR INTRUSION ALARM AND FOR CONNECTION TO DPDT MICROSWITCH TO ENERGIZE LIGHTS AND EXHAUST FAN WHEN ACCESS DOOR IS OPENED
Y	WEATHERPROOF, GFI DUPLEX RECEPTACLE 24" ABOVE FINISH FLOOR
Z	2-LAMP STRIP FLUORESCENT ENCLOSED SURFACE MOUNTED LIGHT FIXTURE
AA	PEDESTAL TYPE 100 AMP, 120/240 VOLT, SINGLE PHASE METER AND MAIN CIRCUIT BREAKER. INSTALL ON 16"x16"x6" CONCRETE PAD PER PNM DWG #DS-19-84.0
BB	TELEMETRY SYSTEM MAST AND ANTENNA LOCATION TO BE DETERMINED BY CITY OF ALBUQUERQUE / WATER UTILITY DIVISION.
CC	1/2" PIPE TAP WITH 1/2" BALL VALVE AND CAP
DD	INLINE EXHAUST FAN W/SWITCH AND ACCESS DOOR CONTROLS
EE	PRESSURE TRANSDUCER, HONEYWELL MODEL STG 644-EIG-0000-DM. PROVIDE 1/2" PIPE TAP, 1/2" BALL VALVE AND TUBING TO CONNECT TRANSDUCER TO PIPE BARREL
FF	D.I. SPOOL FLG. x P.E.
GG	MEGA FLANGE - FLANGE ADAPTER, AS MANUFACTURED BY EBAA IRON SALES, OR APPROVED EQUAL.
HH	INSULATING FLANGE KIT.

REVISIONS	CITY OF ALBUQUERQUE
	WATER
	STANDARD PRV STATION WITH POWER/TELEMETRY
	DWG. 2356 JANUARY 2003

PRV VAULT DIMENSION AND REINFORCING SCHEDULE

"L"=VAULT LENGTH
"W"=VAULT WIDTH

PIPE SIZE	STANDARD PRV NO METER, NO BYPASS		STANDARD PRV NO METER, W/BYPASS		WITH PROPELLER METER AND NO BYPASS		WITH PROPELLER METER AND BYPASS		WITH MAGNETIC FLOW METER AND BYPASS		WALL THICKNESS		TOP THICKNESS		WALL REINFORCING: WITHOUT BYPASS			WALL REINFORCING: WITH BYPASS		
													TRAFFIC	NONTRAFFIC	"L"	"W"		"L"	"W"	
(IN)	"L"	"W"	"L"	"W"	"L"	"W"	"L"	"W"	"L"	"W"	L(t)	W(t)	T(t)	T(t)	a	a	b	a	a	b
6	10'–6"	5'–6"	11'–8"	8'–0"	10'–6"	5'–6"	14'–6"	8'–0"	15'–8"	8'–6""	1'–0"	1'–0"	1'–0"	0'–8"	#6 @ 12"	TYPICAL	TYPICAL	#5 @ 6"	TYPICAL	#6 @ 12"
8	10'–6"	5'–8"	12'–0"	8'–2"	10'–6"	5'–8"	15'–4"	8'–2"	16'–2"	8'–8"	1'–0"	1'–0"	1'–0"	0'–8"	#6 @ 12"	TYPICAL	TYPICAL	#5 @ 6"	TYPICAL	#6 @ 12"
10	10'–6"	5'–10"	13'–0"	8'–4"	11'–4"	5'–10"	17'–4"	8'–4"	17'–4"	8'–10"	1'–0"	1'–0"	1'–0"	0'–8"	#6 @ 12"	#6 @ 12"	TYPICAL	#5 @ 6"	#6 @ 12"	#6 @ 12"
12	10'–6"	6'–0"	13'–8"	8'–6"	12'–8"	6'–0"	19'–0"	8'–6"	18'–4"	9'–0"	1'–0"	1'–0"	1'–0"	0'–8"	#6 @ 12"	#6 @ 12"	TYPICAL	#5 @ 6"	#6 @ 12"	#6 @ 12"
14	10'–6"	6'–2"	14'–9"	8'–8"	14'–3"	6'–2"	21'–6"	8'–8"	20'–2"	9'–2"	1'–0"	1'–2"	1'–0"	0'–8"	#5 @ 6"	#5 @ 6"	#6 @ 12"	#5 @ 6"	#5 @ 6"	#6 @ 12"
16	10'–6"	6'–4"	15'–4"	8'–10"	16'–6"	6'–4"	24'–2"	8'–10"	21'–0"	9'–4"	1'–0"	1'–2"	1'–0"	0'–8"	#5 @ 6"	#5 @ 6"	#6 @ 12"	#5 @ 6"	#5 @ 6"	#6 @ 12"

DIMENSIONAL NOTES:

"L" = VAULT LENGTH
"W" = VAULT WIDTH
L(t) = WALL THICKNESS(LENGTH)
W(t) = WALL THICKNESS(WIDTH)
T(t) = TOP SLAB THICKNESS

WALL REINFORCING NOTES:

1. "a" BAR DESIGNATION REPRESENTS WALL DOWELS PROTRUDING VERTICALLY FROM BASE SLAB ALONG LENGTHWISE DIMENSION "L" OR WIDTH DIMENSION "W".
2. "b" BAR DESIGNATION REPRESENTS ADDITIONAL HORIZONTAL WALL CORNER REINFORCING.

GENERAL NOTES:

1. TYPICAL WALL REINFORCING SHALL BE #5 @ 12" O.C., EACH WAY, EACH FACE UNLESS SHOWN OTHERWISE ON THE SCHEDULE. PROVIDE BARS AS INDICATED ON THE SCHEDULE AND LAP W/ #5 @ 12" FOR REMAINDER OF WALL HT. OR LENGTH.
2. TYPICAL BASE SLAB REINFORCING SHALL BE #5 @ 12" EACH WAY, TOP AND BOTTOM OF SLAB.
3. CONCRETE SHALL BE IN ACCORDANCE WITH STD SPEC SEC. 510 AND SEC. 101 FOR HYDRAULIC CONCRETE f'c=4000 psi @ 28 DAYS. ALL REINFORCING STEEL SHALL BE GRADE 60.
4. IF THE DEPTH OF VAULT EXCEEDS THE 11'–0" MAX. DEPTH SHOWN, THE ENGINEER/CONTRACTOR SHALL DESIGN THE REINFORCEMENT, WALL & FLOOR THICKNESS TO SUIT THE SPECIFIC CONDITIONS. ALL STRUCTURAL MODIFICATIONS SHALL BE DESIGNED AND STAMPED BY A LICENSED NEW MEXICO PROFESSIONAL ENGINEER.

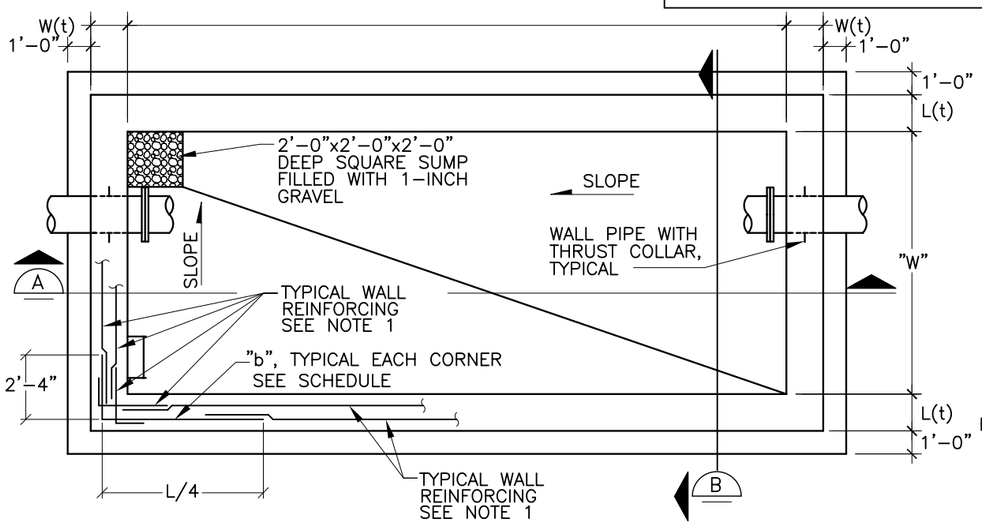

INTERIOR PLAN

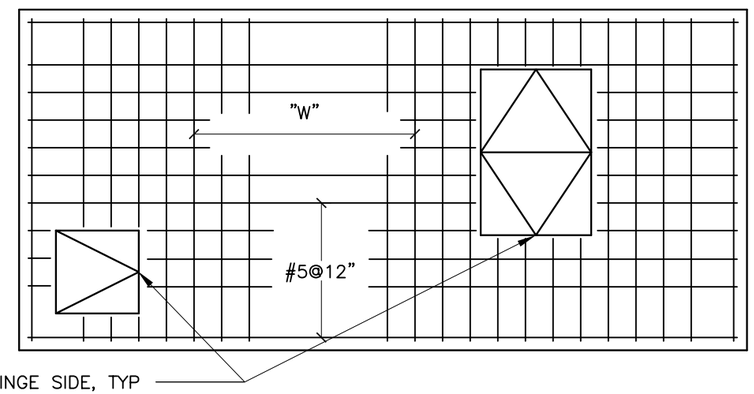

TOP PLAN

VAULT TOP REINFORCING		
VAULT DIMENSION	REINFORCING T(t)=0'–8" CENTERED MAT	REINFORCING T(t)=1'–0" BOTTOM MAT
"W"	"W"	"W"
≤6'–0"	#5 @ 12"	#5 @ 12"
>6'–0" ≤7'–0"	#5 @ 12"	#6 @ 12"
>7'–0" ≤9'–0"	#6 @ 12"	#7 @ 12"
>9'–0" ≤10'–0"	#7 @ 12"	#7 @ 12"

* #5=2'–6", #6=3'–0", #7=3'–6" EXCEPT REPLACEMENT BARS FOR "W" BARS IN CENTERED OR BOTTOM MAT SHALL BE FULL WIDTH OF VAULT

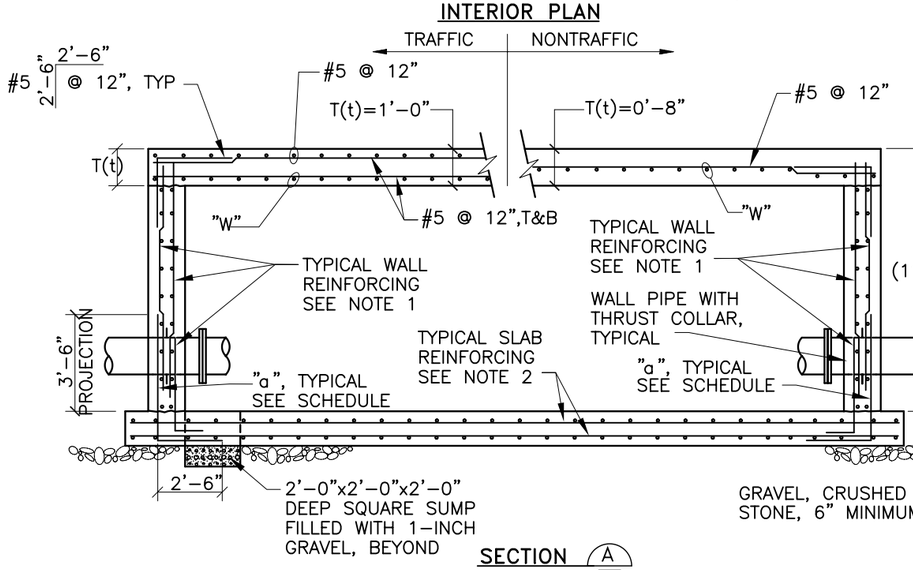

SECTION A

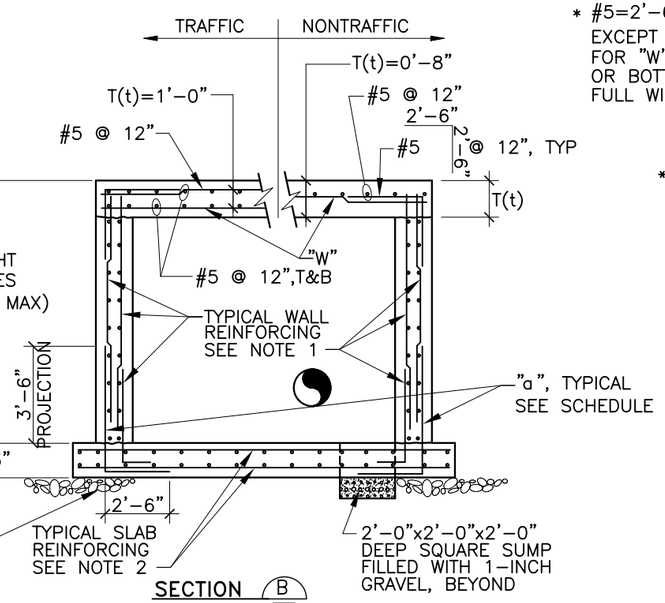

SECTION B

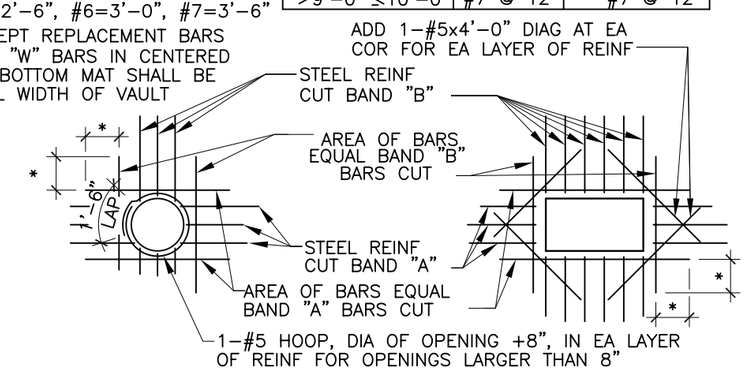

OPENING NOTES:

1. TYPICAL FOR ALL OPENINGS IN CONCRETE WALLS AND SLABS.
2. DO NOT WELD REINFORCEMENT TO PIPE SLEEVES AND INSERTS.

REVISIONS	CITY OF ALBUQUERQUE
	WATER
	STANDARD PRV STATION STRUCTURAL DETAILS
	DWG. 2357 JANUARY 2003

*SEE NOTES TIE ROD SCHEDULE			
TEST PRESSURE		150 PSI	
PIPE DIA. (IN.)	MINIMUM PIPE WALL THICKNESS (IN.)*	TIE RODS	
		DIA. (IN.)	NO. REQ'D
6	3/16	5/8	2
8	3/16	5/8	2
10	3/16	5/8	2
12	3/16	5/8	2
14	3/16	3/4	2
16	3/16	7/8	2

NOTES:

1. THE CONTRACTOR SHALL DETERMINE THE LENGTH "J" (COUPLING BOLT LENGTH) FROM MANUFACTURER'S CATALOGS USING THE SPECIFIED MIDDLE RING LENGTH.
2. "G" = MANUFACTURER'S RECOMMENDED SPACE BETWEEN ENDS OF PIPE.
3. "C" = J+Z+1 INCH, (ROUND THIS VALUE UP TO NEXT EVEN INCH), MINIMUM. (FOR Z DIMENSIONS, SEE LUG SCHEDULE.)
4. TIE ROD LENGTH = 2L+2C+G.

LUG SCHEDULE									
STUD DIA	T	W	X	Y	Z	HB	E	HF	L
5/8	3/8	1–3/8	4–1/16	4–1/2	3–3/8	3–7/8	3	1–3/4	3
3/4	3/8	1–1/2	5	4–1/2	5	4–1/8	3–1/8	1–3/4	3
7/8	1/2	1–5/8	5–1/2	4–1/2	5–1/8	4–1/4	3–1/8	1–3/4	4

NOTES:

1. LUG SCHEDULE DIMENSIONS IN INCHES.
2. TIE RODS SHALL CONFORM TO ASTM A193 GRADE B7.
3. NUTS SHALL CONFORM TO ASTM A194 GRADE 2H.
4. PLATE SHALL CONFORM TO ASTM A283 GRADE D.
5. TIE ROD NUTS SHALL BE TIGHTENED GRADUALLY AND EQUALLY IN STAGES TO PREVENT UNEVEN ALIGNMENT AND TO ALLOW EQUAL STRESS ON ALL TIE RODS UNDER PRESSURE. TIGHTEN UNTIL SNUG. THREADS SHALL PROTRUDE FROM NUTS. PEEN THREADS AFTER TIGHTENING NUTS.
6. TIE ROD LUGS SHALL BE SPACED EQUALLY AROUND PIPE.
7. FILLET WELDS SHALL MEET THE MINIMUM REQUIREMENTS OF THE AISC SPECIFICATION EXCEPT AS FOLLOWS: FILLET WELDS SHALL BE 1/4–INCH MINIMUM EXCEPT WHEN WELDING 3/16–INCH PLATE WHERE THEY SHALL BE 3/16–INCH.
8. TIE RODS SHALL NOT BE ATTACHED TO A PIPE WHEN THE WALL THICKNESS IS LESS THAN THE MINIMUM SHOWN ON THE TIE ROD SCHEDULE.
9. FOR ALL BURIED ASSEMBLIES, COAT ALL TIE RODS AND EXPOSED STEEL WITH 16 MILS BITUMASTIC.

DOUBLE COUPLING

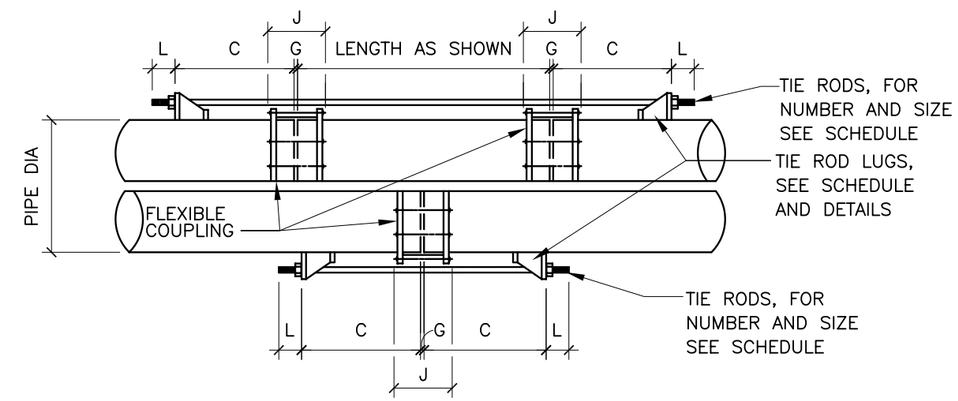

SINGLE COUPLING

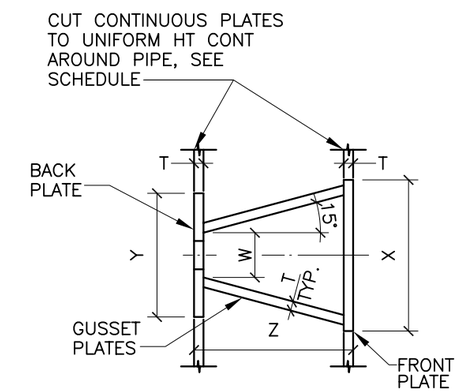

PLAN

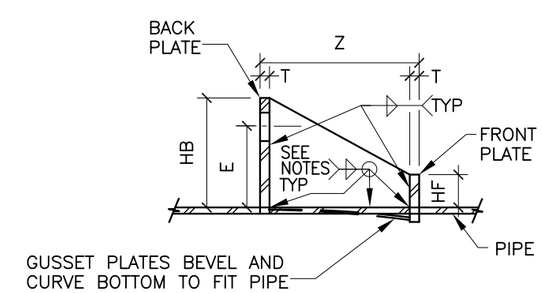

SECTION

REVISIONS	CITY OF ALBUQUERQUE
	WATER THRUST TIE DETAIL
	DWG. 2358 JANUARY 2003

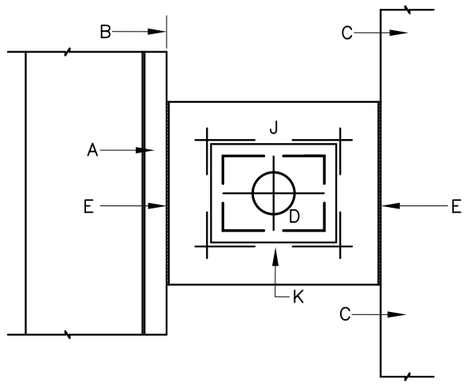

CASE 1

(IN PARKWAY)

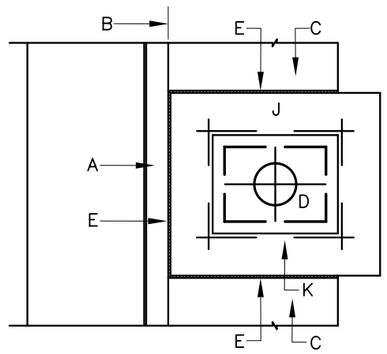

CASE 2

(IN SIDEWALK)

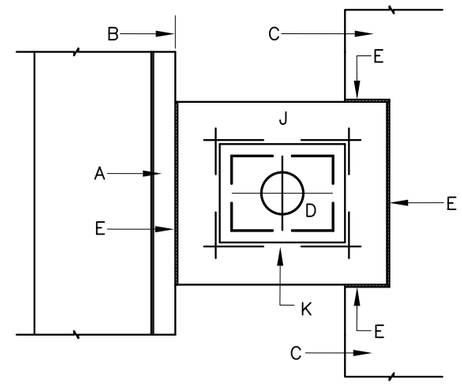

CASE 3

(IN NARROW PARKWAY)

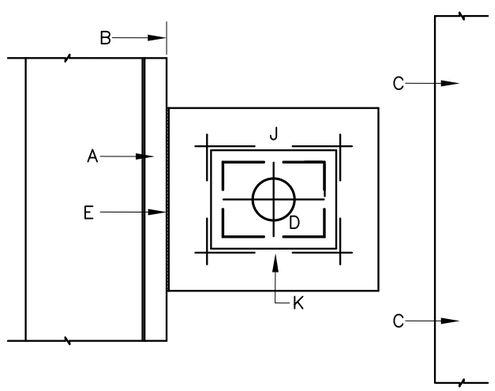

CASE 4

(IN WIDE PARKWAY)

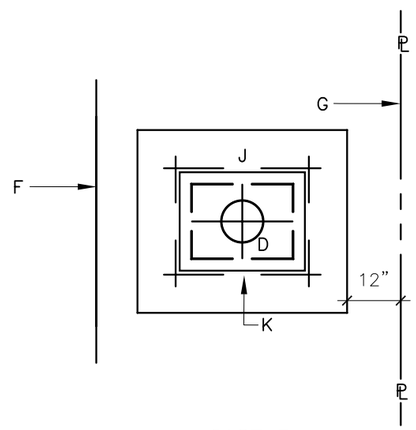

CASE 5

(NO CURB AND GUTTER OR SIDEWALK)

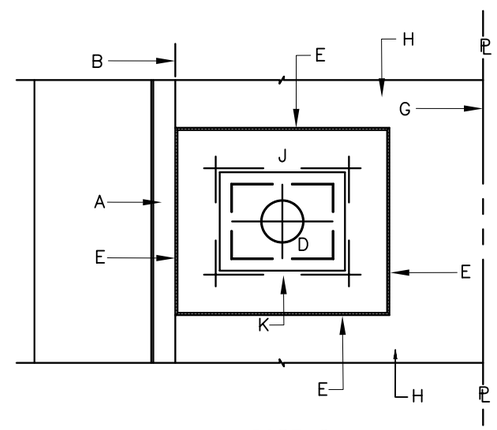

CASE 6

(IN DRIVEPAD)

TYPICAL INSTALLATIONS 3/4" – 1" METERS

GENERAL NOTES:

1 FOR CONSTRUCTION AND DIMENSIONS OF WATER METER BOX AND CONCRETE PAD, SEE DWG. 2362, 2363, 2368 & 2369.

2 BECAUSE OF LIMITED SPACE, METER BOXES MAY BE ROTATED 90°. CONNECTIONS TO BE MADE PER WATER SYSTEMS DIVISION APPROVAL.

3 DOUBLE METER BOXES SHALL BE CENTERED ON ADJOINING PROPERTY LINES.

CONSTRUCTION NOTES:

A CURB.

B BACK OF CURB.

C SIDEWALK.

D METER BOX COVER, SEE DWGS. 2368 OR 2369.

E 1/2" EXPANSION JOINT.

F EDGE OF UNCURBED STREET OR GRADED STREET.

G PROPERTY LINE.

H DRIVEPAD.

J CONCRETE PAD SEE DWG. 2362

K #4 REBAR CONTINUOUS ALL AROUND METER BOX.

REVISIONS	CITY OF ALBUQUERQUE WATER TYPICAL METER BOX INSTALLATIONS DWG. 2361 JANUARY 2003

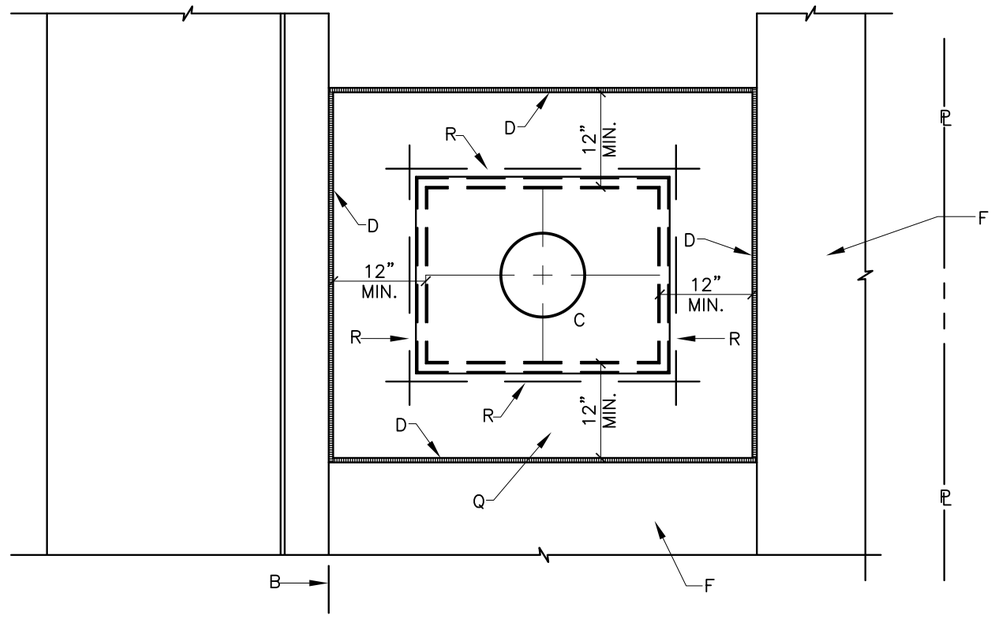

PLAN

SEE DWG. 2361 FOR TYPICAL INSTALLATIONS

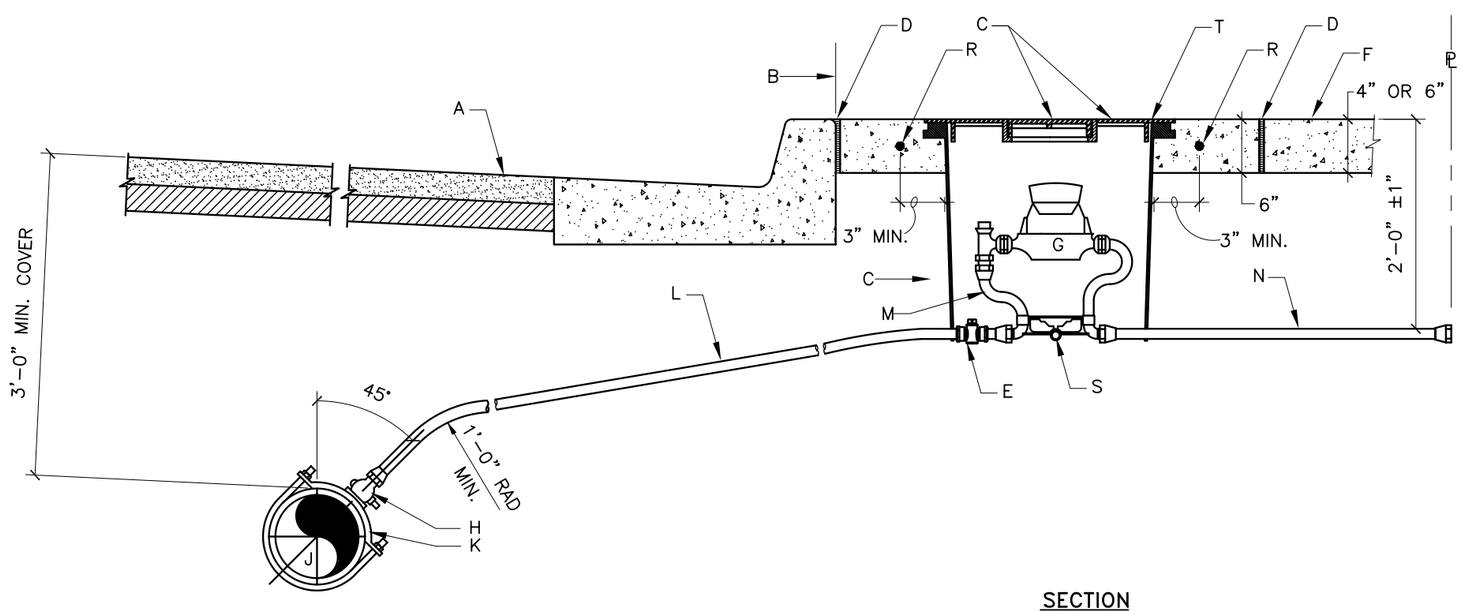

SECTION

SERVICE LINE FOR 3/4" – 1" METER

GENERAL NOTES:

1 THE METER SHALL BE SET UTILIZING A COPPER–SETTER. COPPER–SETTER HEIGHT 10" FOR 1" METER. 7" FOR 3/4" METER.

2 THE VALVE AND METER REGISTER BOX SHALL BE LOCATED UNDER THE LID OPENING. WHERE TWO METERS ARE TO BE INSTALLED IN A SINGLE METER BOX, THE METER REGISTERS SHALL BE WITHIN READING RANGE OF THE LID OPENING.

3 METER BOX LOCATION TO CONFORM TO DWG. 2361.

4 WHEN CONTRACTOR DOES NOT INSTALL METER, CONTRACTOR SHALL PROVIDE REMOVABLE PLUGS FOR END OF COPPER–SETTER.

5 EXISTING CONCRETE TO BE SAWCUT.

CONSTRUCTION NOTES:

A STREET SURFACE.

B BACK OF CURB.

C CAST IRON METER BOX, COVER AND LID. SEE DWG. 2368 OR 2369.

D 1/2" EXPANSION JOINT.

E CURB STOP, LOCATE INSIDE METER BOX.

F SIDEWALK OR DRIVEPAD.

G METER. TOP OF METER TO BE 12"–18" BELOW COVER.

H CORP STOP.

J MAIN WATER LINE.

K TAPPING SADDLE.

L COPPER SERVICE LINE.

M COPPER SETTER.

N TAILPIECE TO PROPERTY LINE WITH INSTA–TITE I.P.T. CAPPED FITTING. DOUBLE CHECK VALVE SHALL BE INSTALLED IN WATER ZONES 0W, 1W, & 1E.

Q CONCRETE PAD REQUIRED IN ALL AREAS PER SEC. 101 EXTERIOR CONCRETE, f'c=3500 psi @ 28 DAYS.

R #4 REBAR CONTINUOUS ALL AROUND METER BOX.

S STABILIZER BAR. USE FOR SINGLE METER ONLY. 12" LONG x 1/2" DIA. GALV. STEEL PIPE.

T METER BOX LID SHALL BE FLUSH WITH SURROUNDING SIDEWALK.

REVISIONS	CITY OF ALBUQUERQUE
	WATER
	3/4" – 1" METERED SERVICE LINE INSTALLATION
	DWG. 2362 JANUARY 2003

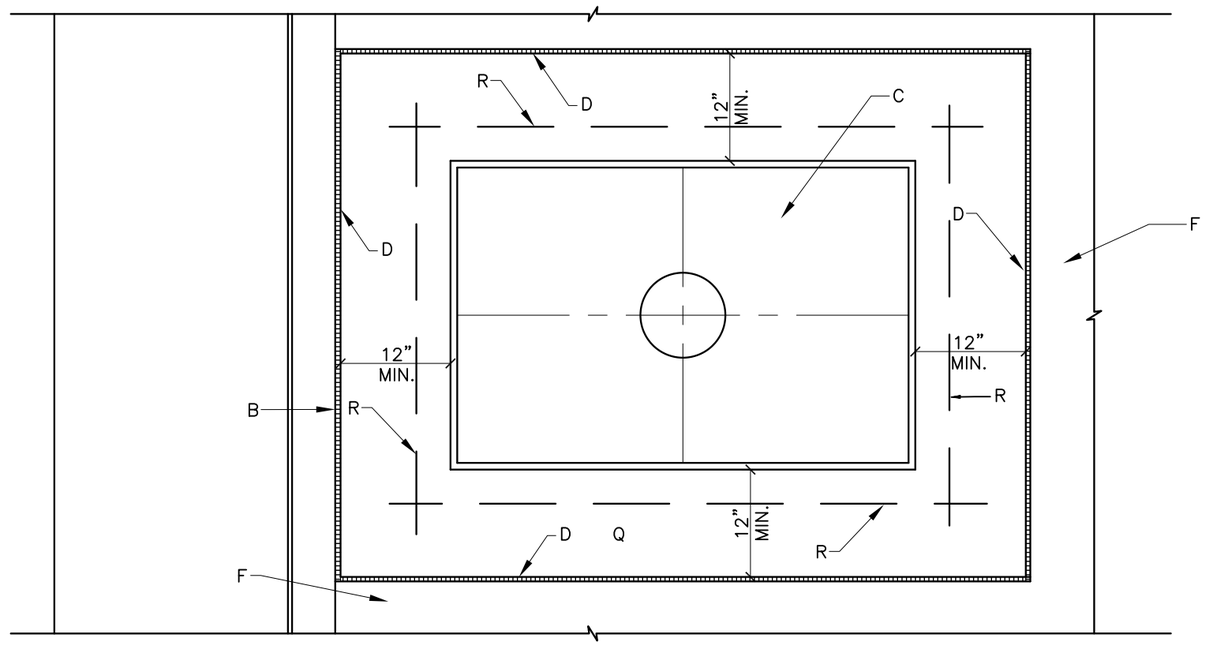

PLAN

SERVICE LINE FOR 1 1/2" – 2" METER

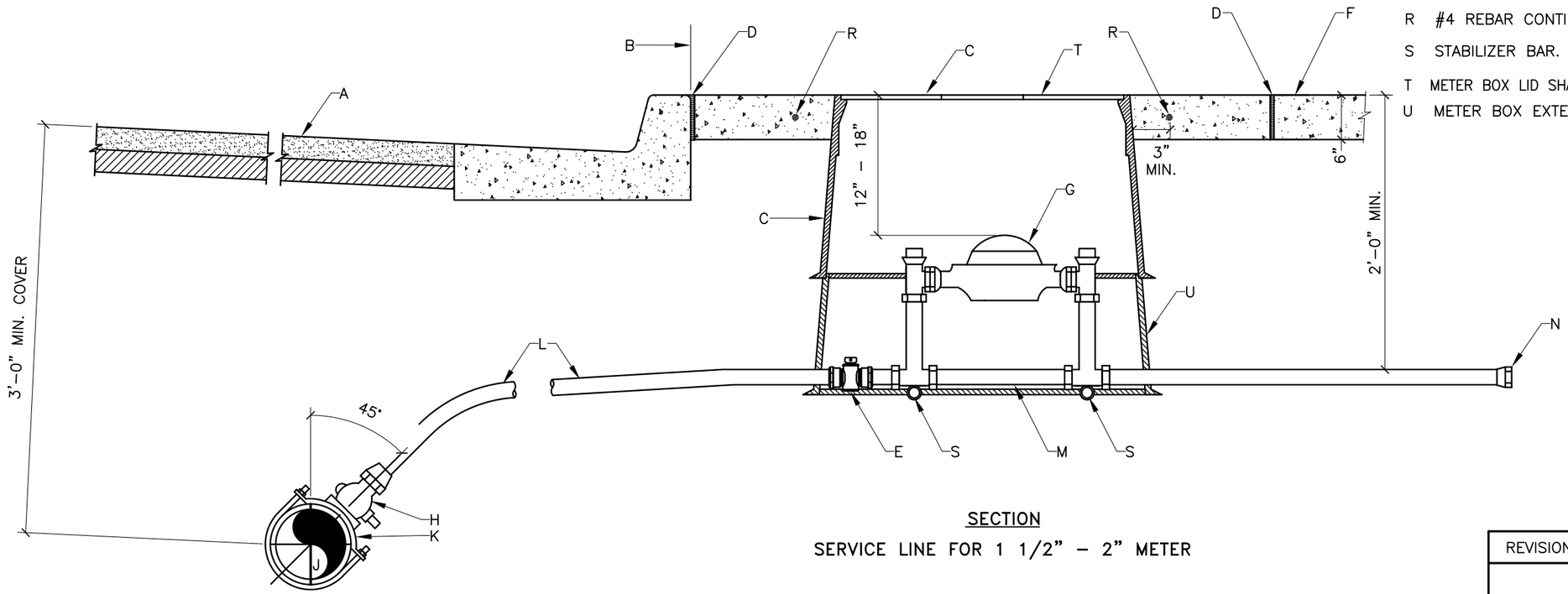

SECTION

SERVICE LINE FOR 1 1/2" – 2" METER

GENERAL NOTES:

1 METER BOX LOCATION TO CONFORM TO DWG. 2361.

CONSTRUCTION NOTES:

A STREET SURFACE.

B BACK OF CURB.

C METER BOX, COVER AND LID, SEE DRAWING 2367. COVER FLUSH WITH SURFACE AND CENTERED OVER METER REGISTER.

D 1/2" EXPANSION JOINT.

E CURB STOP, LOCATE INSIDE METER BOX.

F SIDEWALK OR DRIVEPAD.

G METER. TOP OF METER TO BE 12"–18" BELOW COVER.

H CORP STOP.

J MAIN WATER LINE.

K TAPPING SADDLE.

L COPPER SERVICE LINE.

M COPPER SETTER.

N TAILPIECE 3' LONG, APPROVED COPPER TUBING WITH A CLEAN CUT AT END W/TEMPORARY PLUG. DOUBLE CHECK VALVE SHALL BE INSTALLED IN WATER ZONES 0W, 1W, & 1E.

Q CONCRETE PAD REQUIRED IN ALL AREAS PER SEC. 101 EXTERIOR CONCRETE, f'c=3500 psi @ 28 DAYS.

R #4 REBAR CONTINUOUS ALL AROUND METER BOX.

S STABILIZER BAR. 1/2" X 12" LONG GALVANIZED STEEL PIPE.

T METER BOX LID SHALL BE FLUSH WITH SURROUNDING SIDEWALK.

U METER BOX EXTENSION AS REQUIRED.

REVISIONS	CITY OF ALBUQUERQUE
	WATER 1–1/2" TO 2" METERED SERVICE LINE INSTALLATION DWG. 2363 JANUARY 2003

GENERAL NOTES:

1 METER BOX LOCATION TO CONFORM TO DWG. 2361.

2 CONSTRUCTION OF METER BOX TO CONFORM TO SECTION 802 FOR WATER METER BOX, 3/4" AND 1" METERS.

3 SEE DWG 2368 AND 2369 FOR CAST IRON METER BOX COVER AND LID.

CONSTRUCTION NOTES:

A PIPE HOLE, 1 AT EACH END, 9 1/4" WIDE BY 3 1/4" HIGH.

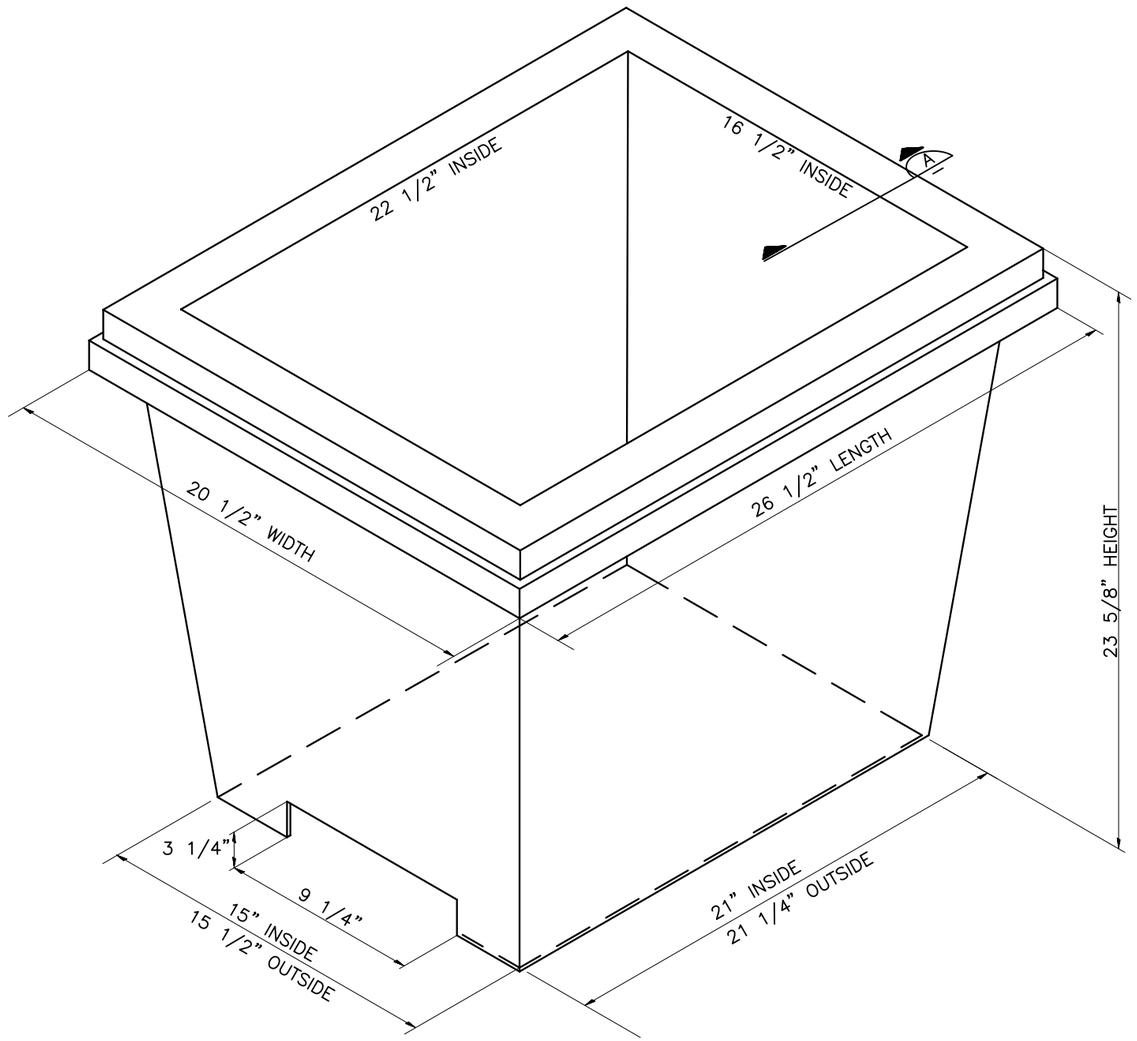

BOX
N.T.S.

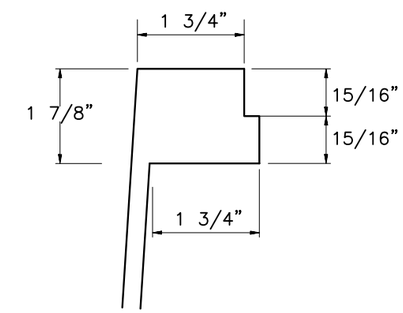

SECTION A
N.T.S.

*METER BOX FOR ONE OR TWO METER INSTALLATIONS

REVISIONS	CITY OF ALBUQUERQUE
	WATER METER BOX* FOR 3/4" AND 1" METERS DWG. 2366 JANUARY 2003

GENERAL NOTES:

1 METER BOX WITH COVER AND LID FOR 1 1/2" AND

2 CONSTRUCTION OF METER BOX, COVER AND LID SHALL CONFORM TO SECTION 802 FOR WATER METER BOX, 1 1/2" AND 2" METERS.

CONSTRUCTION NOTES:

A 3/8"–16NC HEX. HD. BOLT, 2 REQUIRED WITH WASHERS.

B SKID RESISTANT SURFACE.

C 3"x3" PIPE HOLE AT EACH END.

D STANDARD METER LID KEY HOLE OR 1 1/2" x 1/2" LIFTING SLOT.

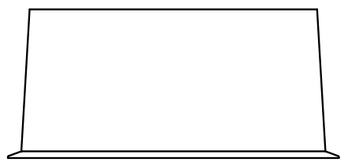

BOX
SIDE VIEW

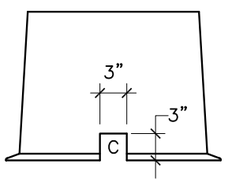

END VIEW

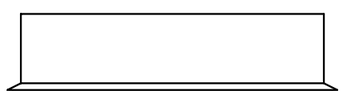

EXTENSION
SIDE VIEW

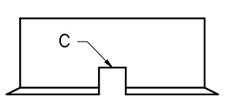

END VIEW

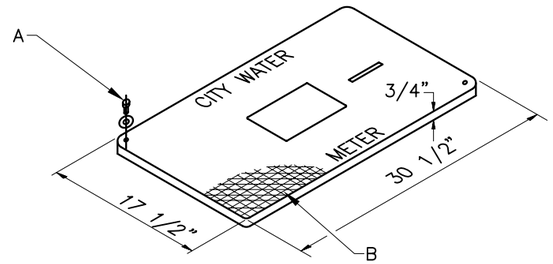

COVER

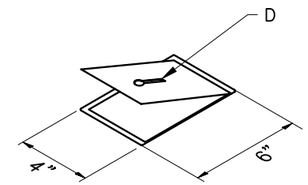

METER LID

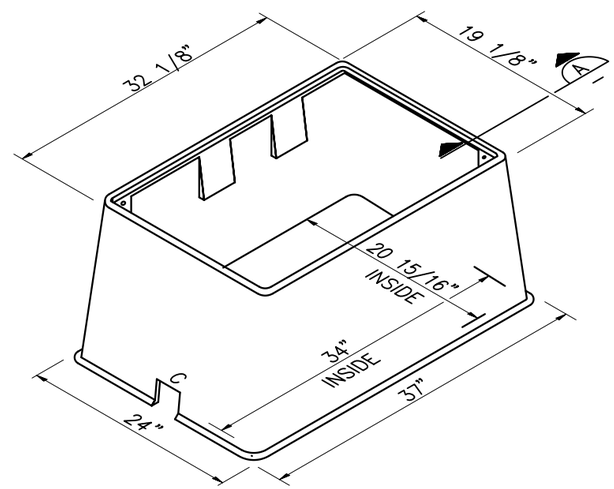

BOX

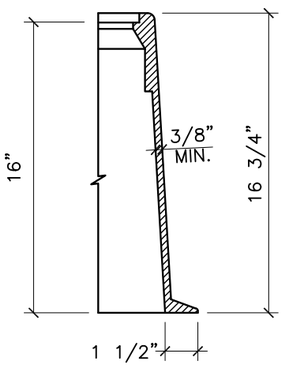

BOX SECTION (A)
N.T.S.

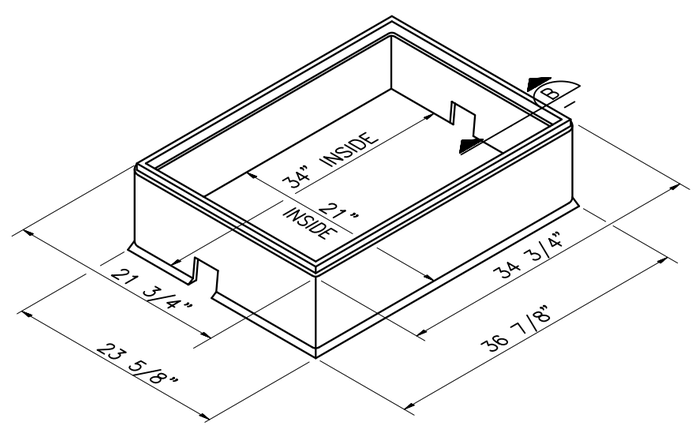

EXTENSION

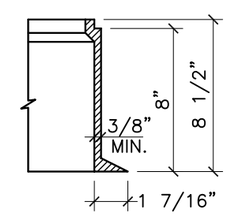

EXTENSION SECTION (B)
N.T.S.

REVISIONS	CITY OF ALBUQUERQUE
	WATER METER BOX COVER & LID FOR 1–1/2" AND 2" METERS DWG. 2367 JANUARY 2003

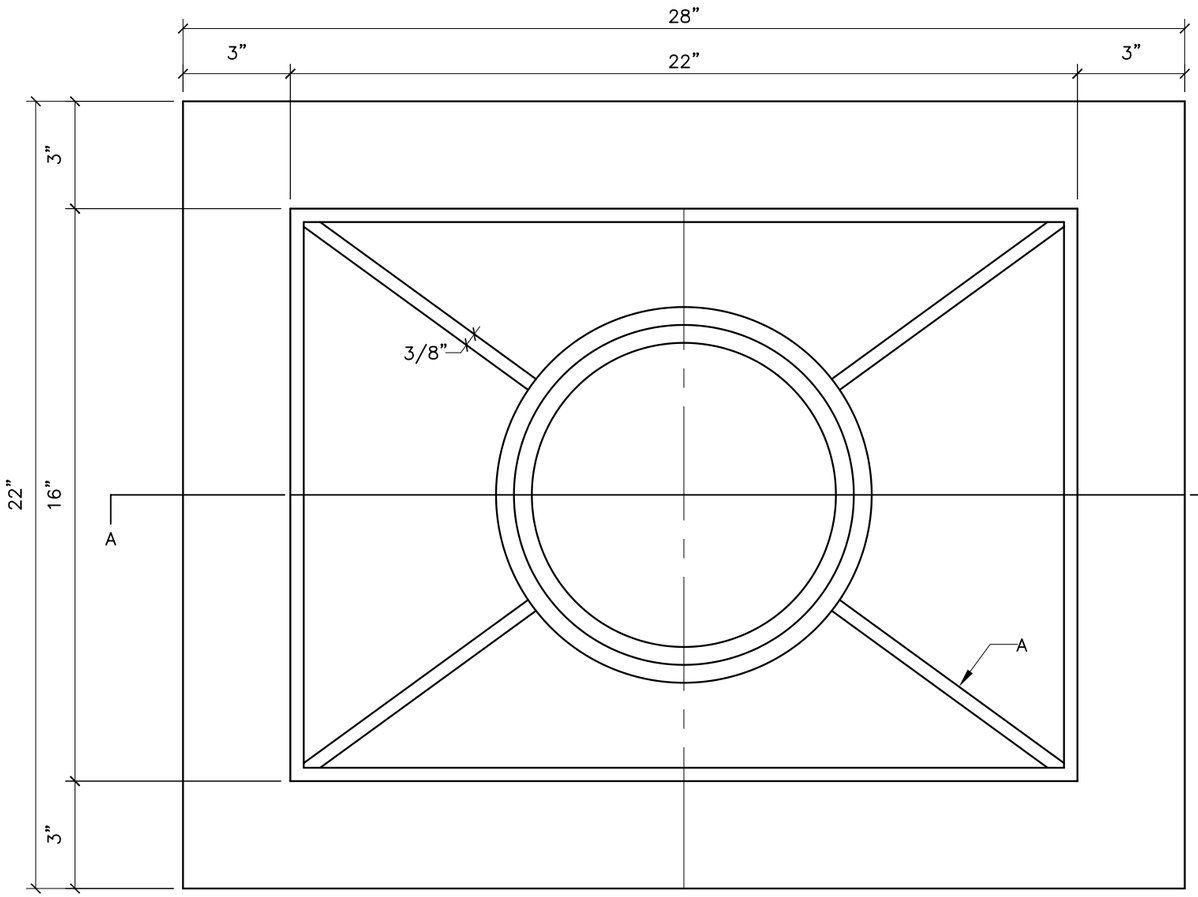

INVERTED PLAN VIEW
BOX COVER FOR 3/4" – 1" METERS

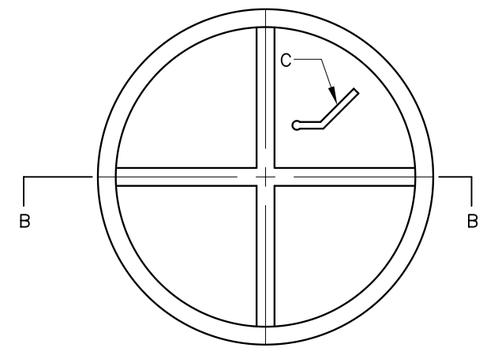

INVERTED PLAN VIEW
BOX LID

GENERAL NOTES:

1 SEE DWG. 2369 WHEN LOCATED ADJACENT TO MOUNTABLE CURB.

COVER

2 MATERIAL – GRAY C.I.

3 ROUND ALL EDGES.

4 TOP TO BE ASPHALT PAINTED.

5 TOP OF COVER SHALL HAVE AN INTEGRATED CORRUGATED DESIGN TO PREVENT SLIPPING.

LID

6 MATERIAL – GRAY C.I.

7 ROUND ALL EDGES.

8 TOP TO BE ASPHALT PAINTED.

9 TOP OF LID SHALL HAVE INTEGRATED CORRUGATED DESIGN TO PREVENT SLIPPING.

10 TOP OF COVER SHALL HAVE INTEGRATED WORDS "CITY WATER METER".

11 LID SHALL NOT ROCK ON COVER AND SHALL BE EASILY OPENED.

12 THE TOP SURFACE OF THE LID SHALL BE FLUSH WITH TOP OF COVER.

CONSTRUCTION NOTES:

A 3/8"x2 3/8" RIB (TYPICAL).

B LID OPENING.

C METER LID KEYHOLE.

D 1/2" THICK RIB.

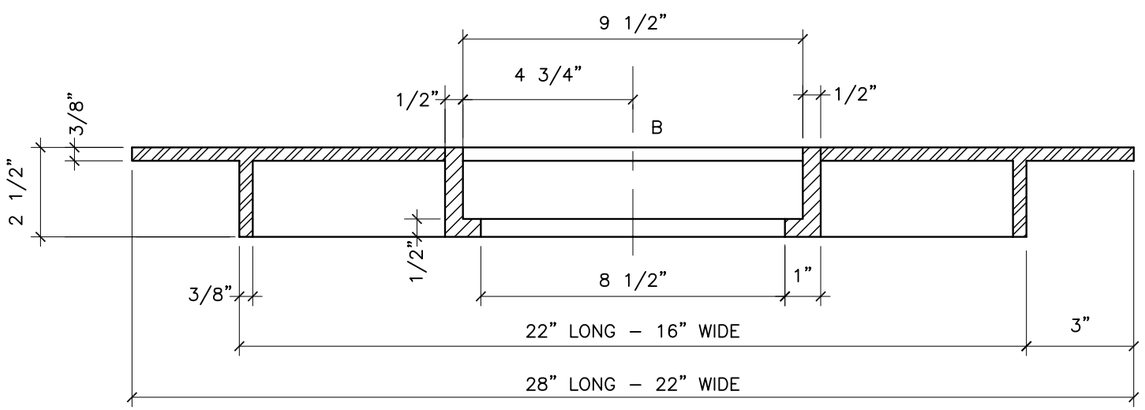

SECTION A–A

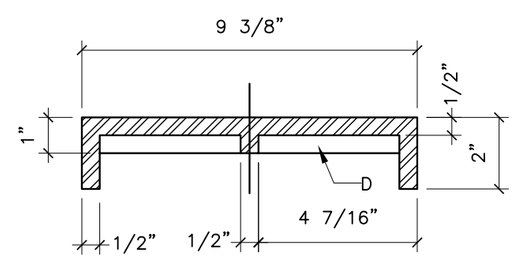

SECTION B–B

REVISIONS	CITY OF ALBUQUERQUE
	WATER LIGHTWEIGHT METER BOX COVER & LID FOR 3/4" & 1" METERS DWG. 2368 JANUARY 2003

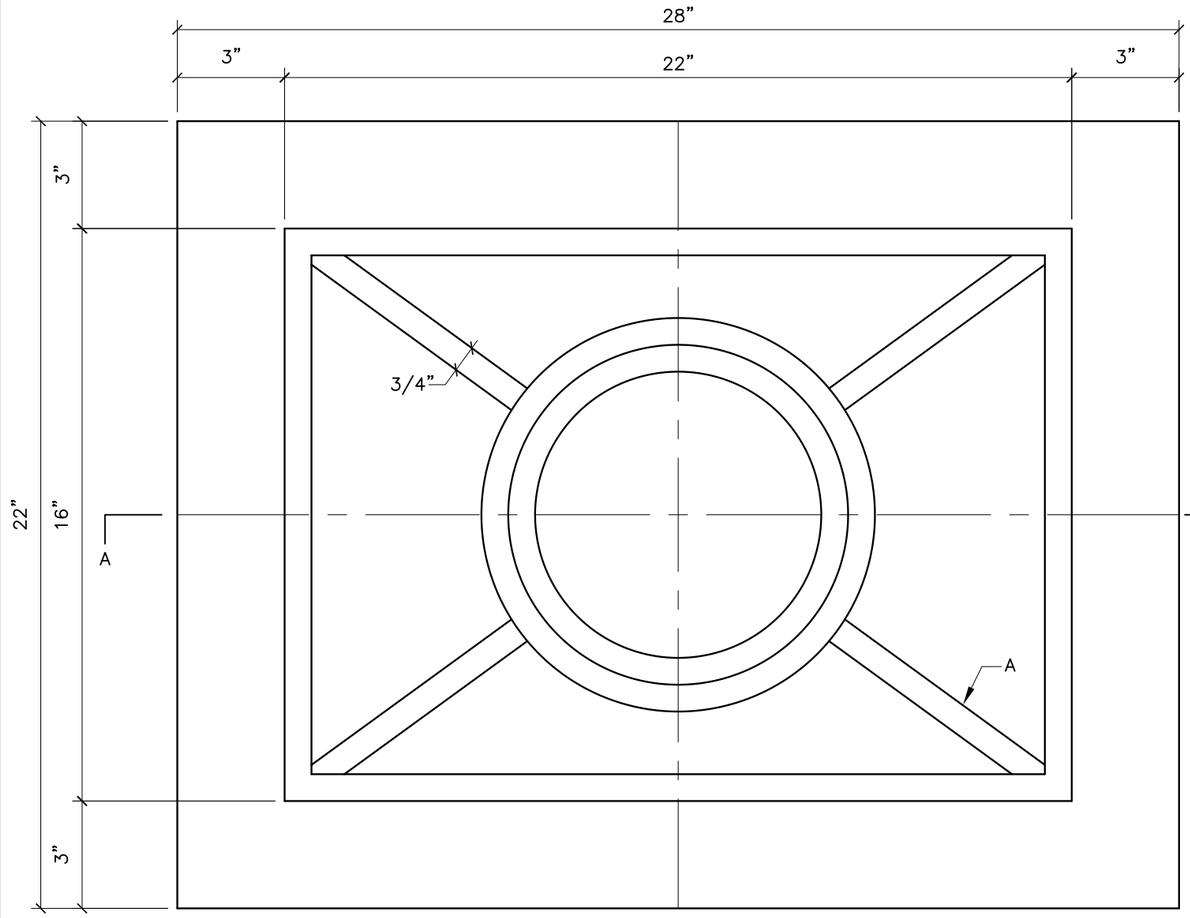

INVERTED PLAN VIEW
BOX COVER FOR 3/4" – 1" METERS

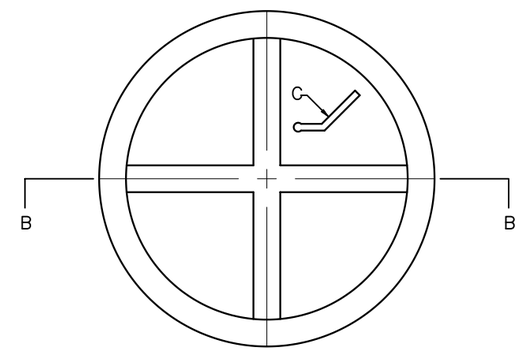

INVERTED PLAN VIEW
BOX LID

GENERAL NOTES:

1 TO BE USED WHERE THE ADJACENT STREET HAS MOUNTABLE CURBS, OR IN DRIVEWAYS.

COVER

2 MATERIAL – GRAY C.I.

3 ROUND ALL EDGES.

4 TOP TO BE ASPHALT PAINTED.

5 TOP OF COVER SHALL HAVE AN INTEGRATED CORRUGATED DESIGN TO PREVENT SLIPPING.

6 COMPONENT THICKNESS 3/4".

LID

7 MATERIAL – GRAY C.I.

8 ROUND ALL EDGES.

9 TOP TO BE ASPHALT PAINTED.

10 TOP OF LID SHALL HAVE INTEGRATED CORRUGATED DESIGN TO PREVENT SLIPPING.

11 TOP OF COVER SHALL HAVE INTEGRATED WORDS "CITY WATER METER".

12 LID SHALL NOT ROCK ON COVER AND SHALL BE EASILY OPENED.

13 THE TOP SURFACE OF THE LID SHALL BE FLUSH WITH TOP OF COVER.

CONSTRUCTION NOTES:

A 3/4"x2" RIB (TYPICAL).

B LID OPENING.

C METER LID KEYHOLE.

D 3/4" THICK RIB.

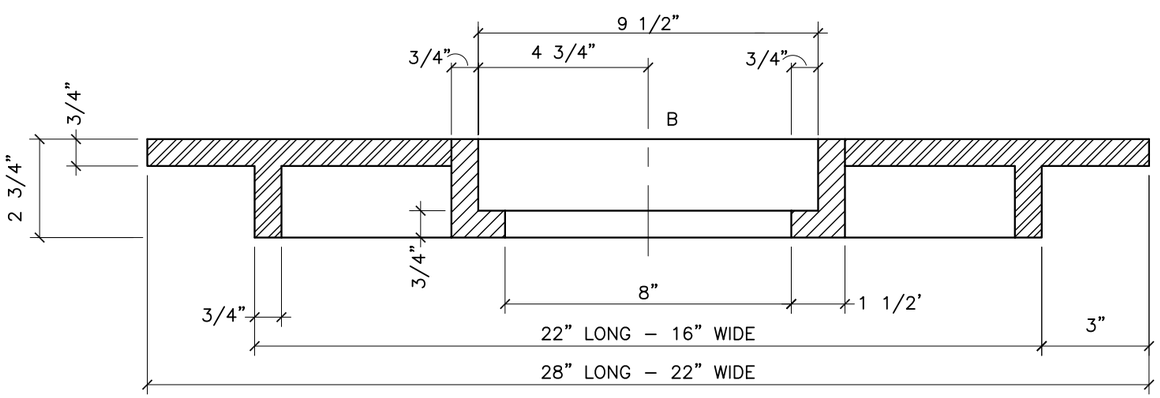

SECTION A–A

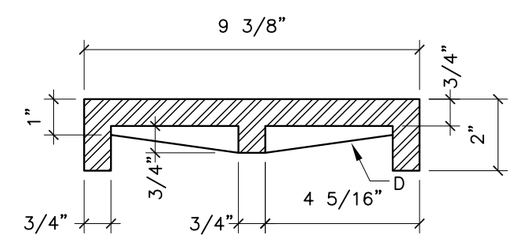

SECTION B–B

REVISIONS	CITY OF ALBUQUERQUE WATER HEAVYWEIGHT METER BOX COVER & LID FOR 3/4" & 1" METERS DWG. 2369 JANUARY 2003

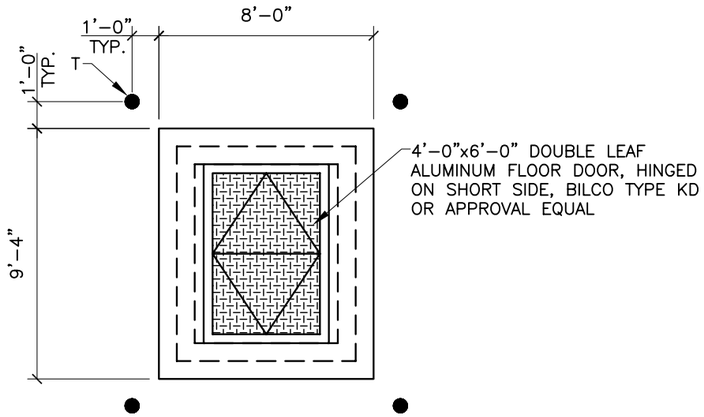

TOP PLAN

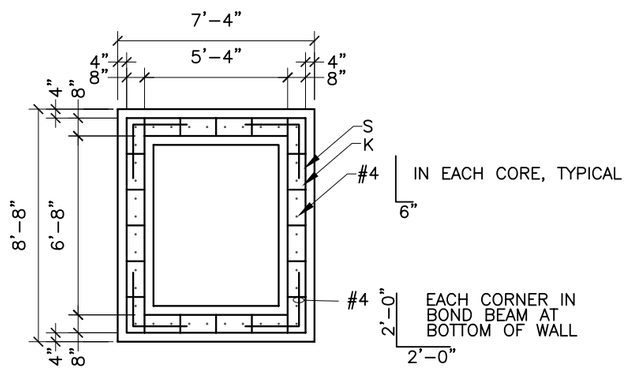

WALL & FOUNDATION PLAN

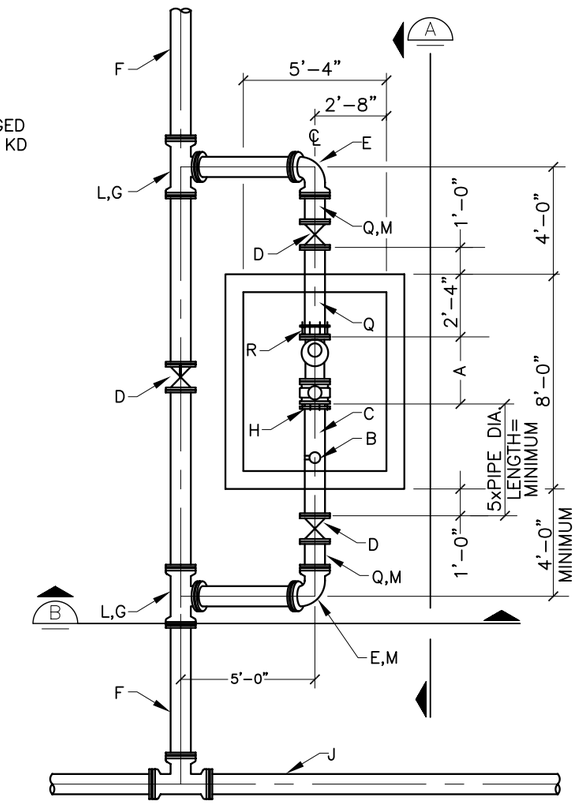

MECHANICAL PLAN

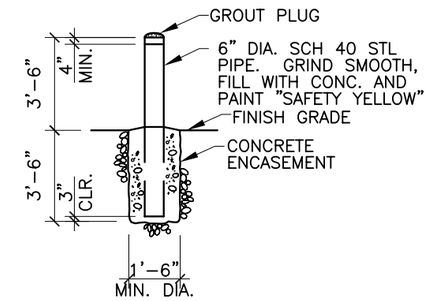

GUARD POST
N T S

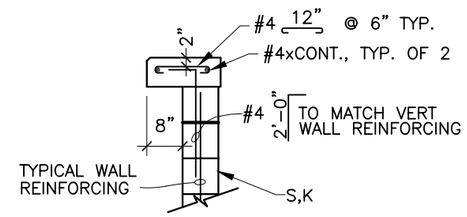

DETAIL 1

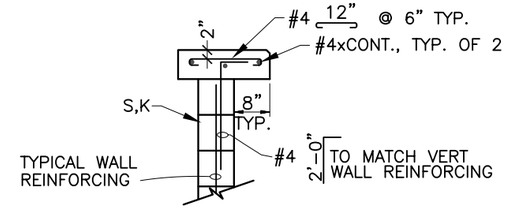

DETAIL 2

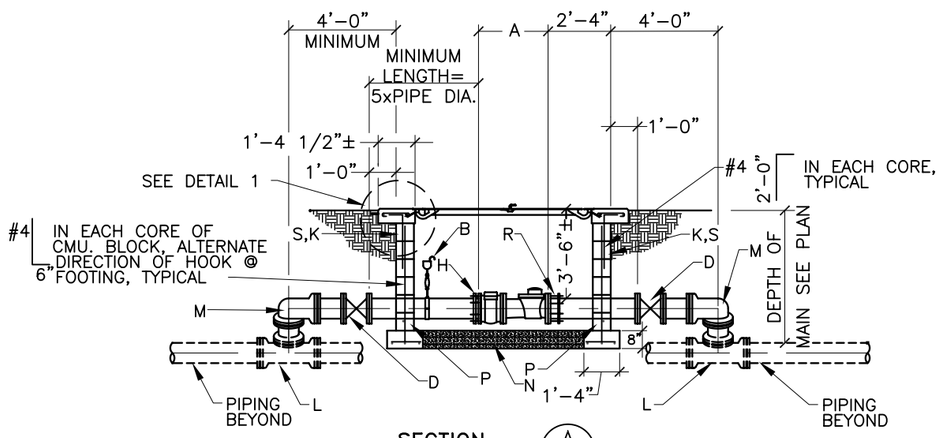

SECTION A

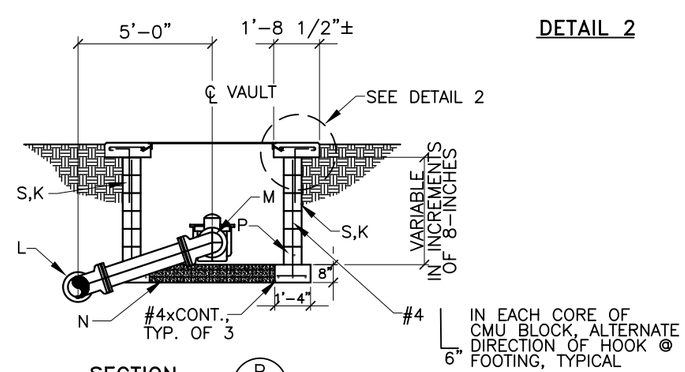

SECTION B

GENERAL NOTES:

1 COMPRESSIVE STRENGTH OF ALL CONCRETE SHALL BE 3500 PSI PER EXTERIOR CONC. SPEC SEC. 101.

2 COMPACT SUBGRADE UNDER AND 12" EITHER SIDE OF FOOTING TO 95% MAXIMUM DENSITY, PER ASTM D-1557 TO 6" MIN. DEPTH.

3 PRECAST CONCRETE VAULT MAY BE USED IN LIEU OF CMU. CONSTRUCTION WITH WATER UTILITY DIVISION APPROVAL. SUBMIT DETAILS FOR REVIEW.

CONSTRUCTION NOTES:

A LENGTH VARIES DEPENDING ON METER SIZE. COORDINATE WITH LAYING LENGTH REQUIRED. METER AND STRAINER TO BE PROVIDED AND INSTALLED BY CITY OF ALBUQUERQUE-WATER UTILITY DIVISION.

B 1" SADDLE TAP, 1" GATE VALVE AND 1" AIR RELEASE VALVE. AIR RELEASE VALVE SHALL BE APCO MODEL NO. 200A OR APPROVED EQUAL.

C D.I. SPOOL (FLANGExPE) LENGTH AS REQ'D. MINIMUM LENGTH SHALL BE 5 TIMES THE PIPE DIAMETER.

D GATE VALVE (FLANGED).

E 90° ELBOW (MJ) WITH MEGALUGS.

F MAIN SERVICE LINE.

G MJ TEE WITH MEGALUGS.

H MEGA FLANGE-FLANGE ADAPTER, SERIES 2100 AS MANUFACTURED BY EBAA IRON SALES, OR APPROVED EQUAL.

J MAIN DISTRIBUTION LINE.

K FILL ALL CMU CORES WITH 3000 PSI. CONCRETE, TYP.

L ROLL TEE UP AS REQUIRED.

M ROLL 90° ELBOW DOWN AS REQUIRED.

N 3/4" GRAVEL FILL PER ASTM C33, NO. 57 GRAVEL, 8" DEPTH.

P CONTINUOUS BOND BEAM AT BOTTOM OF WALL WITH #4xCONT. SEE FOUNDATION PLAN FOR ADDITIONAL REINFORCING AT CORNERS.

Q D.I. PIPE (FLANGExPE) LENGTH AS REQUIRED.

R FLANGE COUPLING ADAPTER, (FCA).

S 8"x16"x8" HOLLOW CORE CONCRETE BLOCK (CMU).

T 6" CONCRETE FILLED GUARD POST, TYPICAL OF 4. SEC. 101 EXTERIOR CONCRETE, f'c=3500 psi @ 28 DAYS.

REVISIONS	CITY OF ALBUQUERQUE
	WATER
	LARGE DIAMETER METER VAULT
	DWG. 2370 JANUARY 2003

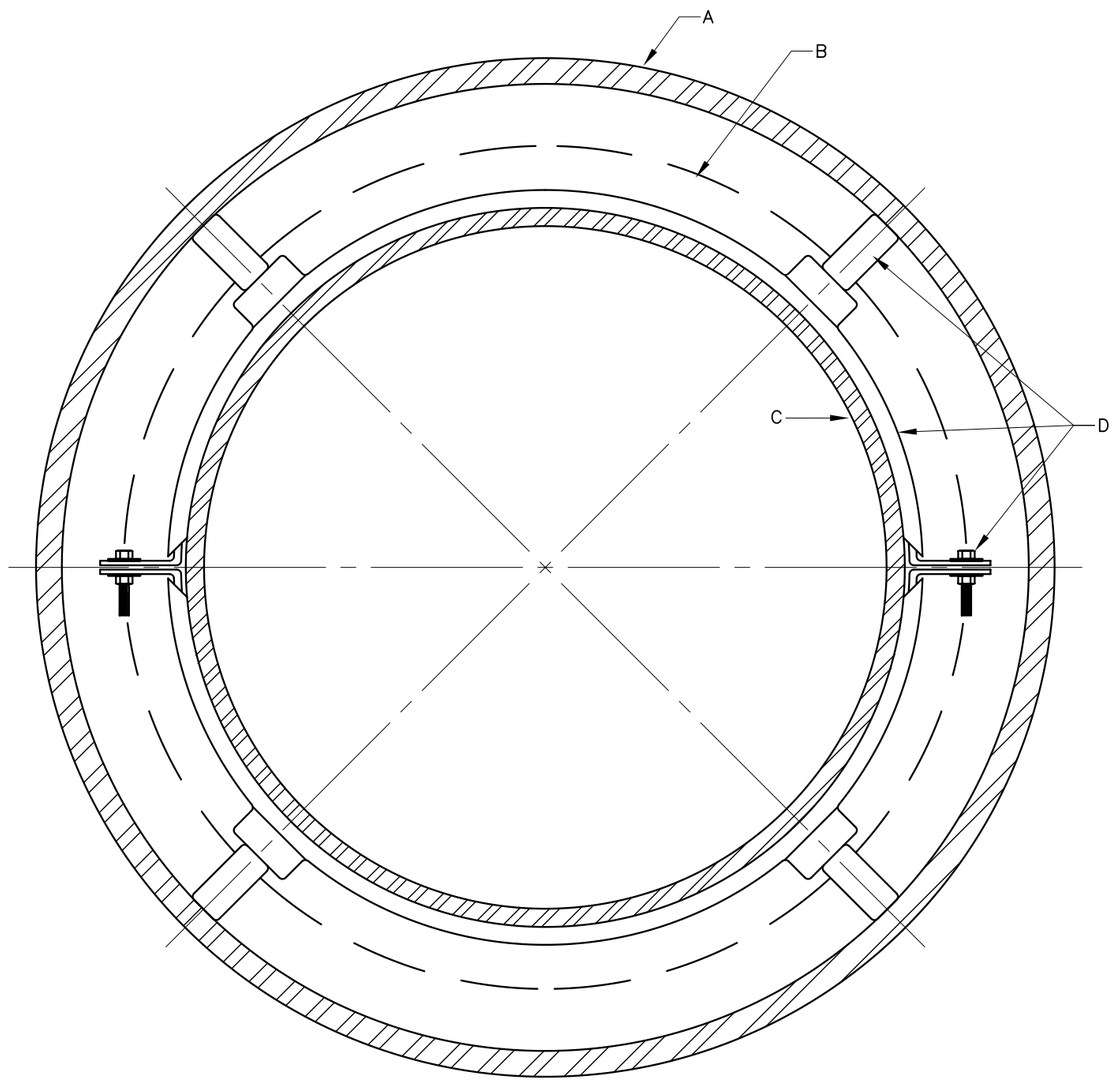

TYPICAL SECTION

GENERAL NOTES:

1 METHOD OF END CLOSURE TO BE DESIGNED TO SUIT CONDITIONS.

CONSTRUCTION NOTES:

A WELDED STEEL PIPE CASING. DIAMETER AND WALL THICKNESS TO BE DESIGNED TO SUIT CONDITIONS.

B BELL DIA. OF CARRIER PIPE.

C CARRIER PIPE.

D MANUFACTURED CASING SPACER. INSTALLATION AND SPACING PER MANUFACTURER'S RECOMMENDATIONS.

REVISIONS	CITY OF ALBUQUERQUE
	WATER BORING INSTALLATION
	DWG. 2380 JANUARY 2003

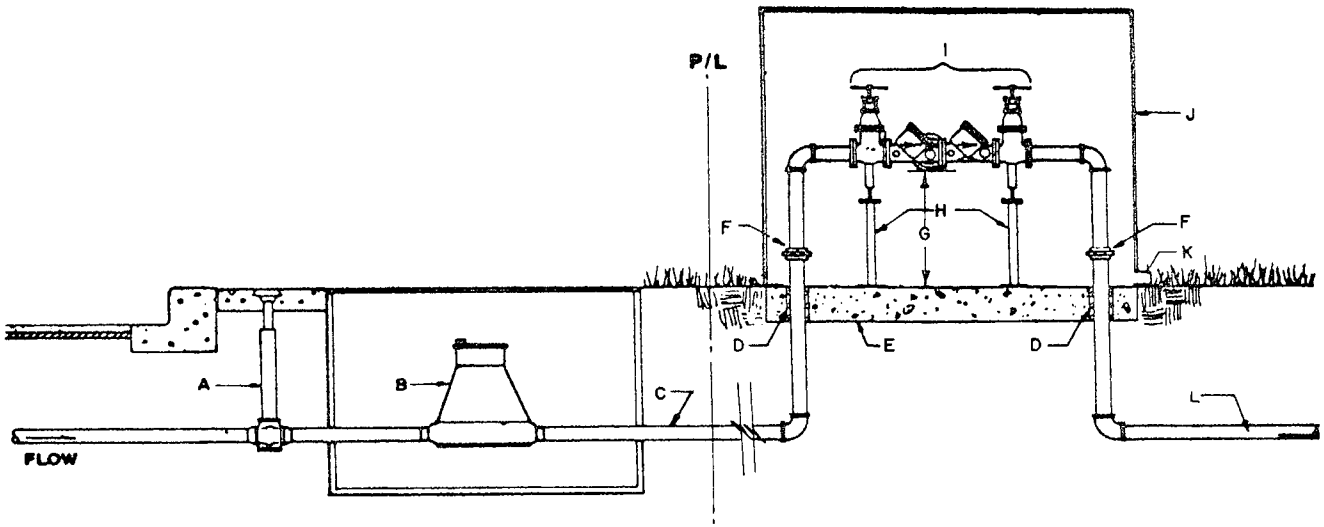

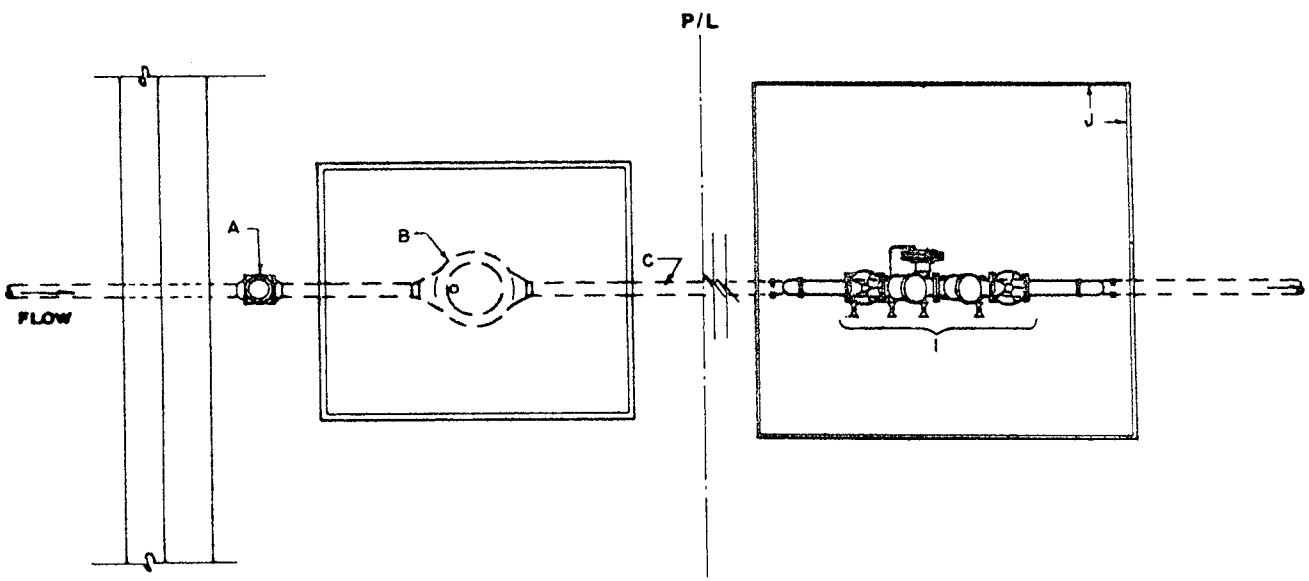

PLAN

GENERAL NOTES:

1. HORIZONTAL RPBA INSTALLATION REQ'D.
2. ABOVE GRADE RPBA INSTALLATION REQ'D.
3. WATER LINE PRESSURE AND TEMP MUST NOT EXCEED RATED CAPACITY OF RPBA.
4. PROTECT FROM FREEZING WITH POSITIVE HEAT SOURCE AND INSULATION.
5. MIN. RPBA SIZE MUST BE THE BLDG SERVICE LINE SIZE.
6. DO NOT INSTALL IN FLOOD PRONE AREAS.
7. INSTALL WATER HAMMER ARRESTORS & THERMO EXPANSION PROTECTION, AS NECESSARY.
8. METALIC RISER PIPING REQ'D.
9. JOINTS TO BE ADEQUATELY RESTRAINED.
10. DEVIATIONS FROM THESE SPECIFICATIONS MUST HAVE PRIOR WRITTEN APPROVAL FROM THE ADMINISTRATIVE AUTHORITY.

CONSTRUCTION NOTES:

A. CURB STOP AND BOX.
B. METER.
C. SERVICE LINE, NO OUTLETS ALLOWED.
D. ADEQUATE SLEEVE & INSULATION(MIN. 1" THICK).
E. MIN. 4" CONCRETE SLAB.
F. UNIONS OR FLANGED FITTINGS, INSTALLED A MIN. OF 4" ABOVE GRADE.
G. 30" MAX., 12" MIN.(FROM LOWEST PT. OF ASSEMBLY TO TOP OF CONC. SLAB).
H. PROVIDE METALIC OR REINF CONC. SUPPORTS ON UNITS >2".
I. APPROVED RPBA, AS SHOWN.
J. PROTECTIVE ENCLOSURE, SEE DWG 2389 FOR DESIGN CRITERIA.
K. DRAIN. SIZE DRAIN TO HANDLE FULL DISCHARGE OF RELIEF VALVE. DRAIN TO DAYLIGHT.
L. BUILDING SERVICE LINE.

REVISIONS	CITY OF ALBUQUERQUE
12/90	WATER REDUCED PRESSURE PRINCIPLE BACKFLOW PREVENTION ASSEMBLY (RPBA) DWG. 2385

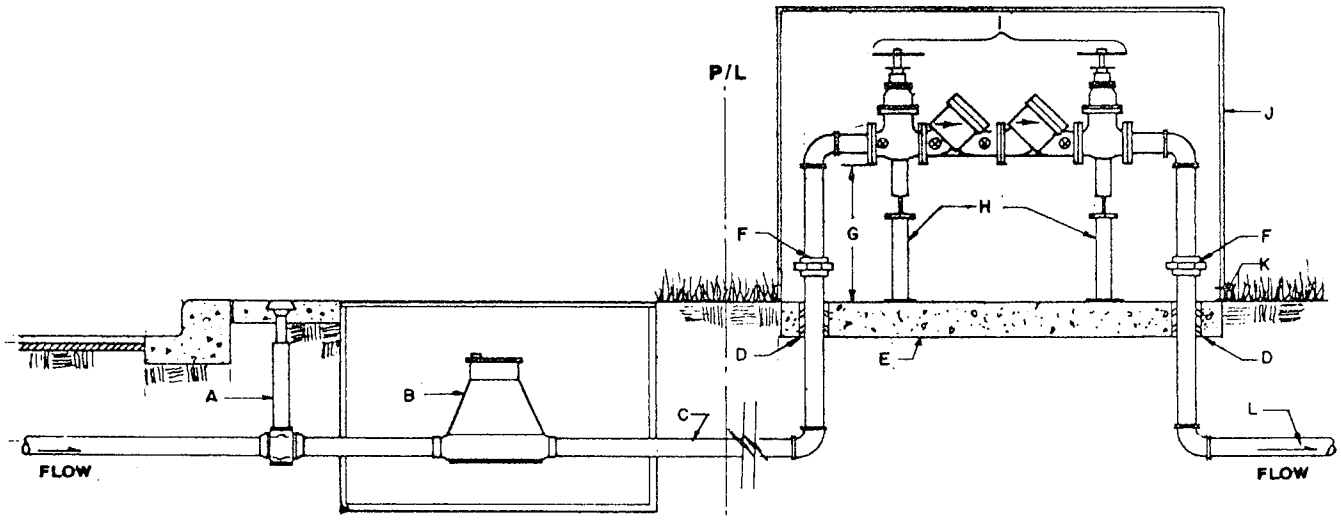

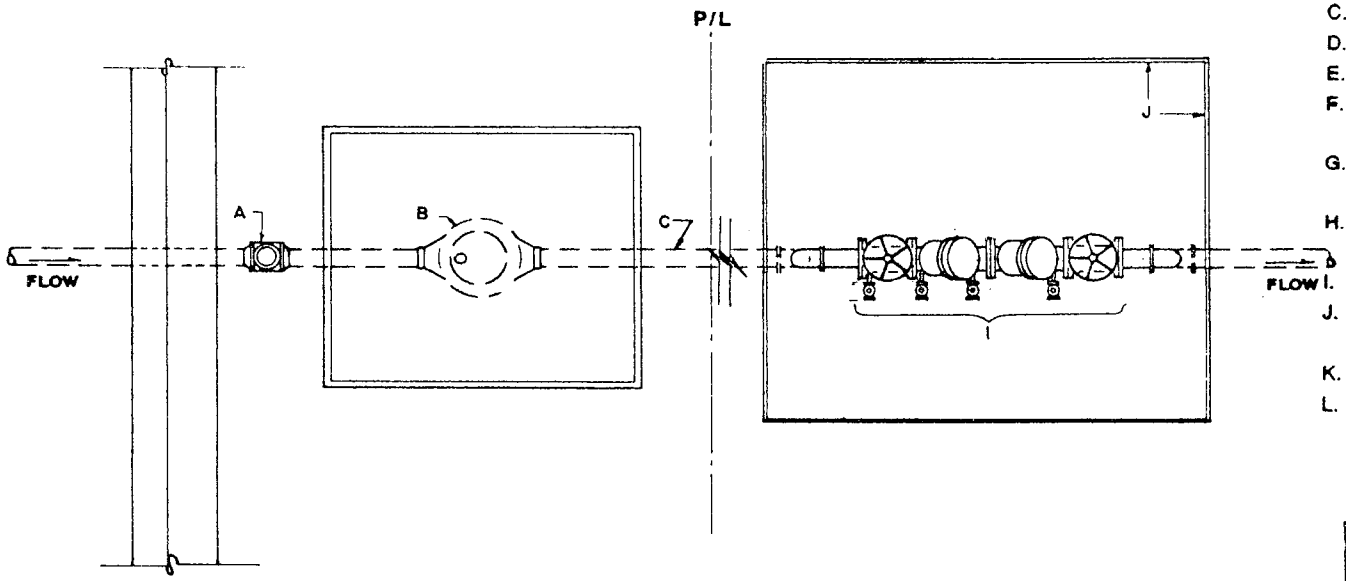

PLAN

GENERAL NOTES:

1. DCVA'S ARE NOT APPROVED FOR LANDSCAPE IRRIGATION SYSTEMS.
2. HORIZONTAL DCVA INSTALLATION REQ'D.
3. ABOVE GRADE DCVA INSTALLATION REQ'D.
4. WATER LINE PRESSURE AND TEMP MUST NOT EXCEED RATED CAPACITY OF DCVA.
5. PROTECT FROM FREEZING WITH POSITIVE HEAT SOURCE AND INSULATION.
6. MIN. DCVA SIZE MUST BE THE BLDG SERVICE LINE SIZE.
7. DO NOT INSTALL IN FLOOD PRONE AREAS.
8. INSTALL WATER HAMMER ARRESTORS & THERMO EXPANSION PROTECTION, AS NECESSARY.
9. JOINTS TO BE ADEQUATELY RESTRAINED.
10. METALIC RISER PIPING REQ'D.
11. DEVIATIONS FROM THESE SPECIFICATIONS MUST HAVE PRIOR WRITTEN APPROVAL FROM THE ADMINISTRATIVE AUTHORITY.

CONSTRUCTION NOTES:

A. CURB STOP AND BOX.
B. METER.
C. SERVICE LINE, NO OUTLETS ALLOWED.
D. ADEQUATE SLEEVE & INSULATION(MIN. 1" THICK).
E. MIN. 4" CONCRETE SLAB.
F. UNION OR FLANGED FITTINGS, INSTALLED A MIN. OF 4" ABOVE GRADE.
G. 30" MAX., 12" MIN.(FROM LOWEST PT. OF ASSEMBLY TO TOP OF CONC. SLAB).
H. PROVIDE METALIC OR REINF CONC. SUPPORTS ON UNITS >2".
I. APPROVED DCVA, AS SHOWN.
J. PROTECTIVE ENCLOSURE, SEE DWG 2389 FOR DESIGN CRITERIA.
K. DRAIN. DRAIN TO DAYLIGHT.
L. BUILDING SERVICE LINE.

REVISIONS	CITY OF ALBUQUERQUE
12/90	WATER DOUBLE CHECK VALVE ASSEMBLY (DCVA) DWG. 2386

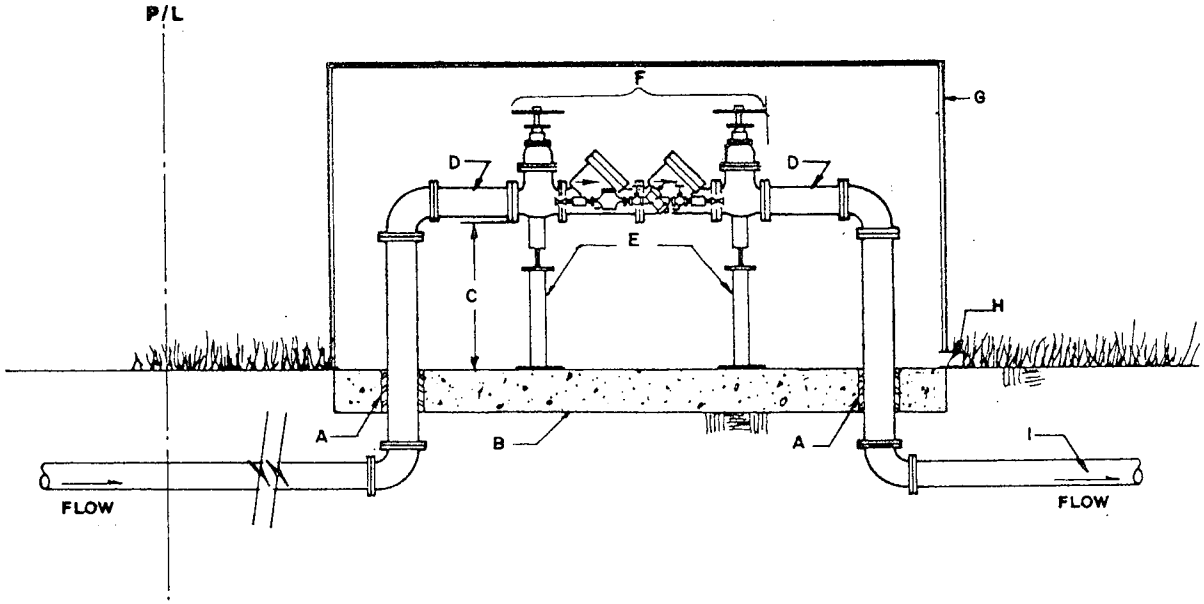

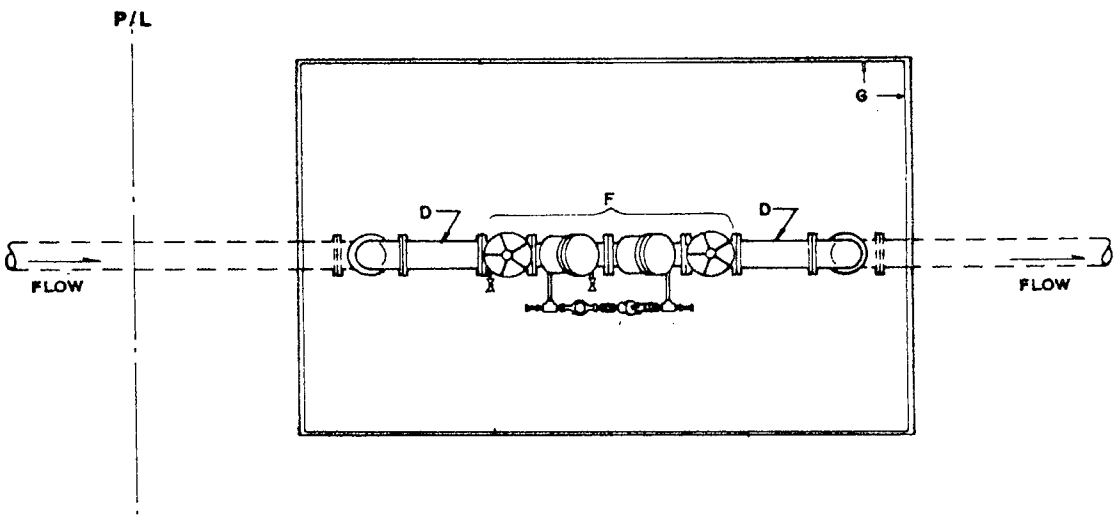

PLAN

GENERAL NOTES:

1. SEE MANUAL OF PROCEDURES FOR THE TYPE OF BACKFLOW PREVENTION ASSEMBLY REQ'D ON PRIVATE FIRE PROTECTION SYSTEMS.
2. HORIZONTAL DCDA INSTALLATION REQ'D.
3. PROTECT FROM FREEZING WITH POSITIVE HEAT SOURCE AND INSULATION.
4. MIN. DCDA SIZE MUST BE THE BLDG SERVICE LINE SIZE.
5. METALIC RISER PIPING REQ'D.
6. ABOVE GRADE DCDA INSTALLATION REQ'D.
7. FLANGED FITTINGS REQ'D. JOINTS TO BE ADEQUATELY RESTRAINED.
8. WATER LINE PRESSURE AND TEMP MUST NOT EXCEED RATED CAPACITY OF DCDA.
9. INSTALL WATER HAMMER ARRESTORS & THERMO EXPANSION PROTECTION, AS NECESSARY.
10. DEVIATIONS FROM THESE SPECIFICATIONS MUST HAVE PRIOR WRITTEN APPROVAL FROM THE ADMINISTRATIVE AUTHORITY.

CONSTRUCTION NOTES:

A. ADEQUATE SLEEVE & INSULATION(MIN. 1" THICK).
B. MIN. 4" CONCRETE SLAB.
C. 30" MAX., 12" MIN.(FROM LOWEST PT. OF ASSEMBLY TO TOP OF CONCRETE SLAB).
D. PIPE SPOOL, OPTIONAL.
E. PROVIDE METALIC OR REINF CONC. SUPPORTS.
F. APPROVED DCDA, AS SHOWN.
G. PROTECTIVE ENCLOSURE, SEE DWG 2389 FOR DESIGN CRITERIA.
H. DRAIN. DRAIN TO DAYLIGHT.
I. BUILDING SERVICE LINE.

REVISIONS	CITY OF ALBUQUERQUE
12/90	WATER DOUBLE CHECK-DETECTOR CHECK ASSEMBLY DWG. 2387 (DCDA)

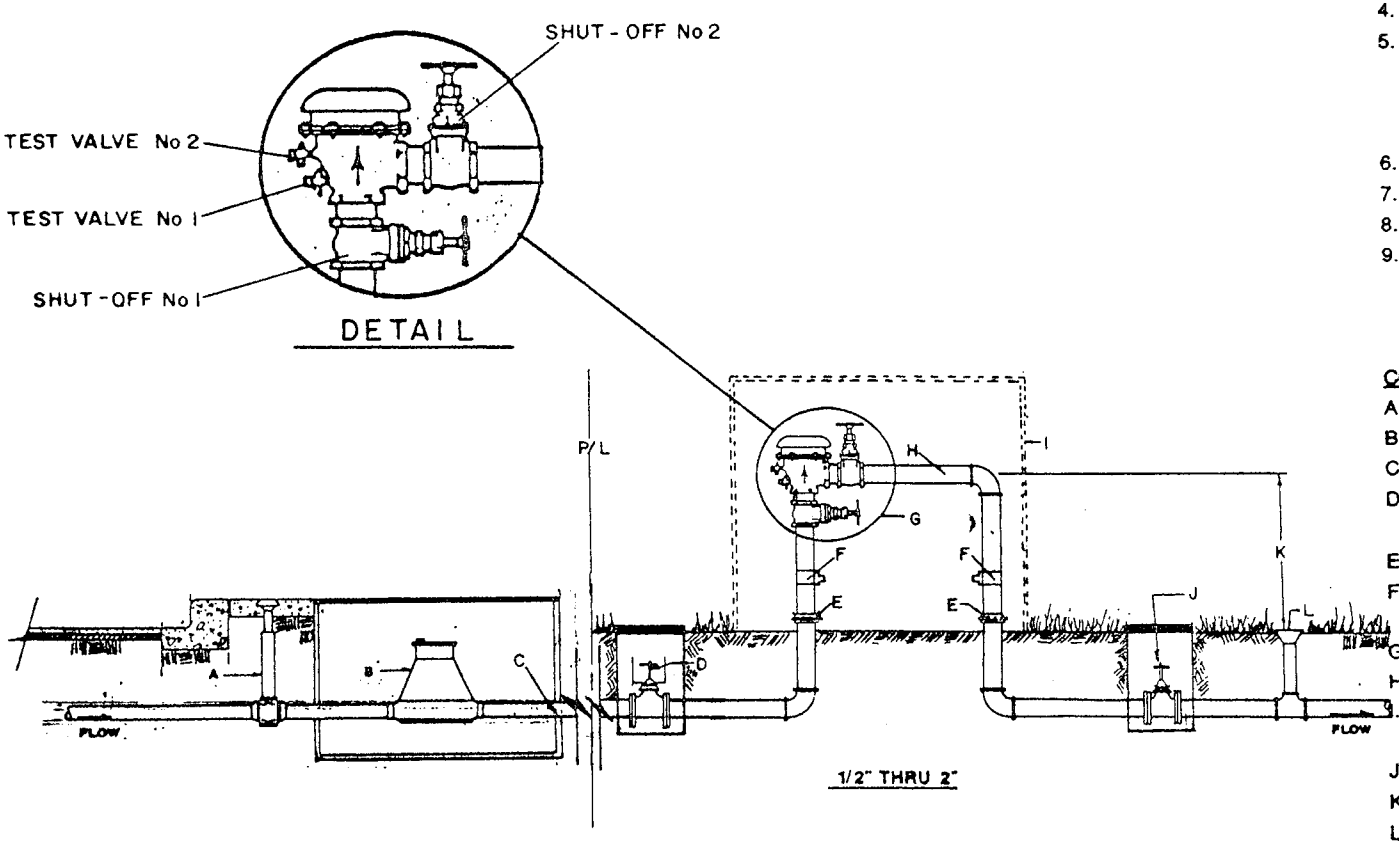

GENERAL NOTES:

1. USE THIS INTERIM DWG UNTIL THE CITY OF ALBUQUERQUE'S PARK & RECREATION DEPARTMENT STD DWG IS AVAILABLE.
2. PVB'S UNAPPROVED FOR CONTAINMENT PROTECTION, EXCEPT FOR LAWN IRRIGATION SYSTEMS.
3. DO NOT INSTALL IN FLOOD PRONE AREAS.
4. DO NOT INSTALL PVB'S >5' ABOVE GROUND LEVEL.
5. PROTECT PVB'S FROM FREEZING W/ POSITIVE HEAT SOURCE. OTHER MEANS OF FREEZE PROTECTION MAY BE USED W/ PRIOR WRITTEN APPROVAL BY THE ADMINISTRATIVE AUTHORITY.
6. HORIZONTAL INSTALLATION REQ'D, AS SHOWN.
7. JOINTS TO BE ADEQUATELY RESTRAINED.
8. METALIC RISER PIPING REQ'D.
9. CONSUMER MAY OBTAIN A PROCEDURE FOR WINTERIZING THE INSTALLATION FROM THE ADMINISTRATIVE AUTHORITY.

CONSTRUCTION NOTES:

A. CURB STOP AND BOX.
B. METER.
C. SERVICE LINE, NO OUTLETS ALLOWED.
D. MASTER VALVE(ELECTRIC OR MANUAL), SEE LANDSCAPE DWG. 2703 FOR ELECTRIC VALVE DESIGN.
E. UNIONS, MIN. 4" ABOVE GRADE.
F. TEE W/ DRAIN PLUG OR BALL DRAIN VALVE, MIN. 6" ABOVE GRADE.
G. APPROVED PVB, AS SHOWN.
H. SPOOL, 12" MAX. LENGTH.
I. ENCLOSURE, OPTIONAL. SEE WATER DWG 2389 FOR DESIGN CRITERIA IF ENCLOSURE IS USED.
J. CONTROL VALVE(ELECTRIC OR MANUAL), OPTIONAL.
K. 12" MIN. ABOVE ALL DOWNSTREAM PIPING & OUTLETS.
L. SPRINKLER.

REVISIONS	CITY OF ALBUQUERQUE
12/90	LANDSCAPE PRESSURE VACUUM BREAKER (PVB)
	DWG. 2388A

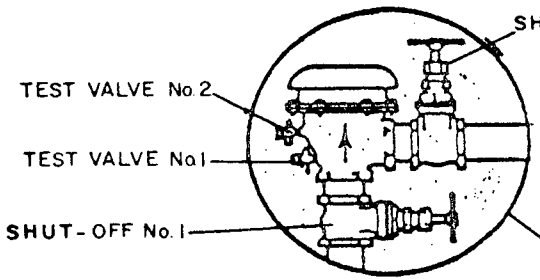

DETAIL
NTS

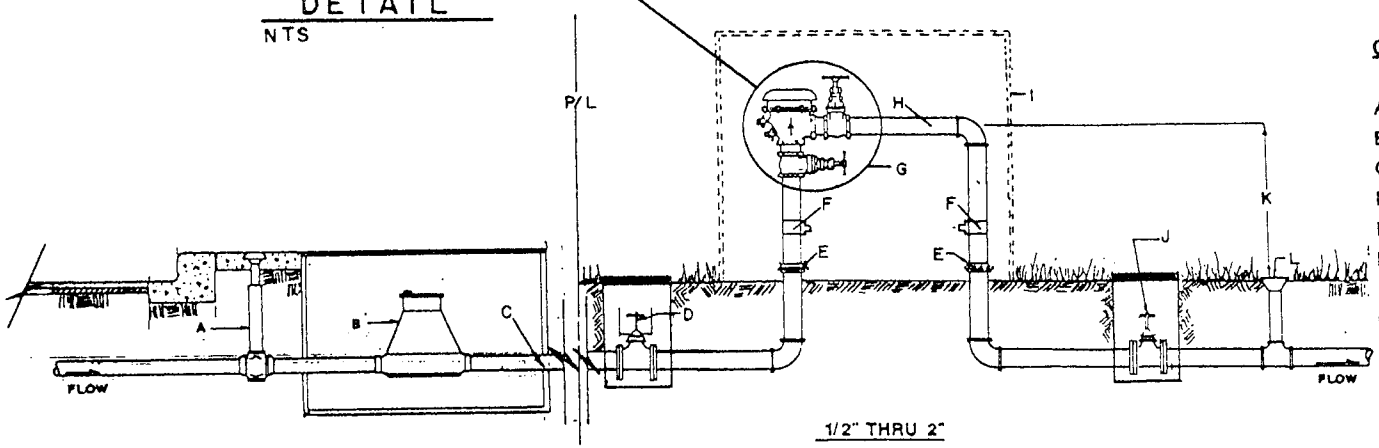

1/2" THRU 2"

GENERAL NOTES:

1. USE THIS INTERIM DWG UNTIL THE CITY OF ALBUQUERQUE'S PARK & RECREATION DEPARTMENT STD DWG IS AVAILABLE.
2. PVB'S UNAPPROVED FOR CONTAINMENT PROTECTION, EXCEPT FOR LAWN IRRIGATION SYSTEMS.
3. DO NOT INSTALL IN FLOOD PRONE AREAS.
4. DO NOT INSTALL PVB'S >5' ABOVE GROUND LEVEL.
5. PROTECT PVB'S FROM FREEZING W/ POSITIVE HEAT SOURCE.
6. HORIZONTAL INSTALLATION REQ'D, AS SHOWN.
7. JOINTS TO BE ADEQUATELY RESTRAINED.
8. METALIC RISER PIPING REQ'D.
9. CONSUMER MAY OBTAIN A PROCEDURE FOR WINTERIZING THE INSTALLATION FROM THE ADMINISTRATIVE AUTHORITY.

CONSTRUCTION NOTES:

A. CURB STOP AND BOX.
B. METER.
C. SERVICE LINE, NO OUTLETS ALLOWED.
D. SHUT-OFF VALVE, NORMALLY OPEN VALVE.
E. UNIONS, MIN. 4" ABOVE GRADE.
F. TEE W/ DRAIN PLUG OR BALL DRAIN VALVE, MIN. 6" ABOVE GRADE.
G. APPROVED PVB, AS SHOWN.
H. SPOOL, 12" MAX. LENGTH.
I. ENCLOSURE. SEE WATER DWG 2389 FOR DESIGN CRITERIA.
J. MASTER VALVE(ELECTRIC OR MANUAL), SEE LANDSCAPE DWG. 2703 FOR ELECTRIC VALVE DESIGN.
K. 12" MIN. ABOVE ALL DOWNSTREAM PIPING & OUTLETS.
L. SPRINKLER.

REVISIONS	CITY OF ALBUQUERQUE
12/90	LANDSCAPE PRESSURE VACUUM BREAKER (PVB) DWG. 2388B

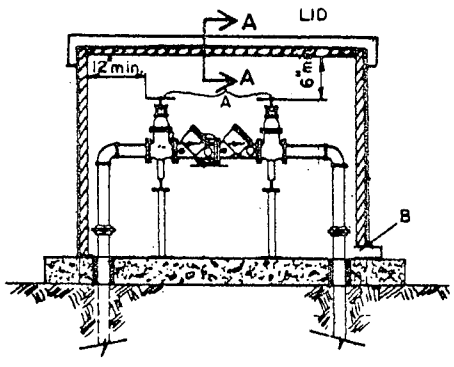

PROFILE

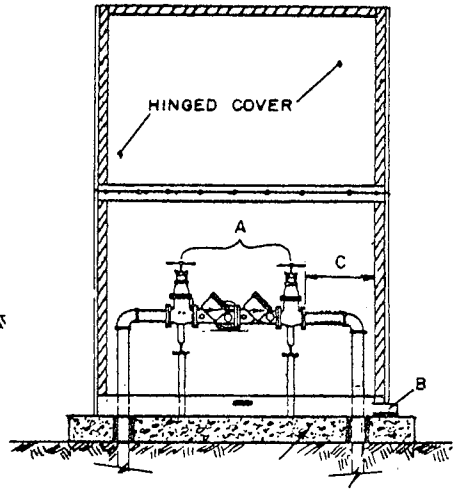

FRONT VIEW

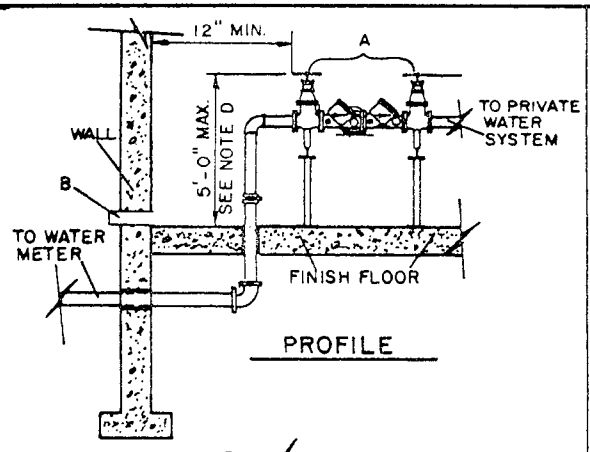

PROFILE

SECTION A-A

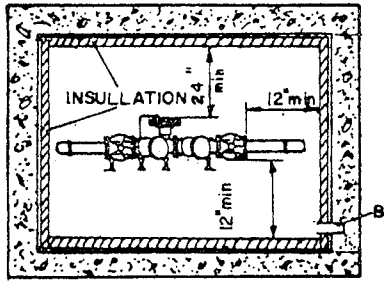

PLAN VIEW

TYPE A. ENCLOSURE: WITH PERMANENT SIDE WALLS

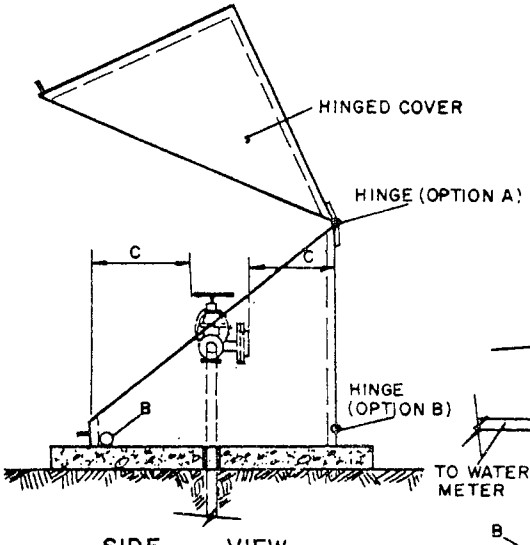

SIDE VIEW

TYPE B. ENCLOSURE: WITH HINGED COVER

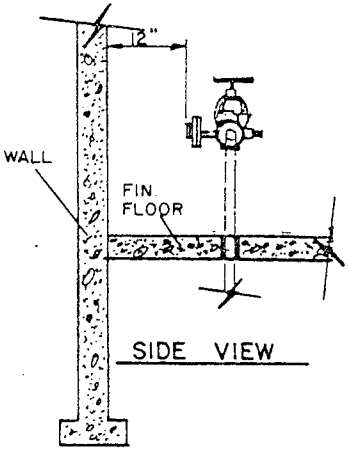

SIDE VIEW

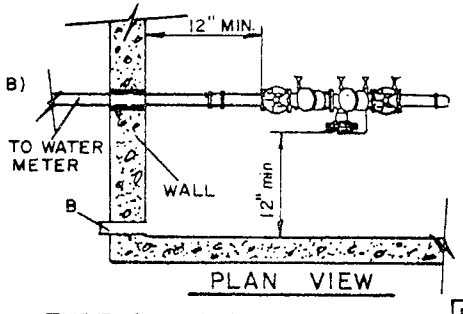

PLAN VIEW

TYPE C. ENCLOSURE: AND TYPICAL INSTALLATION INDOOR STRUCTURE

GENERAL NOTES:

1. ENCLOSURE DESIGN, CONSTRUCTION AND MAINT. IS THE RESPONSIBILITY OF THE CONSUMER. THE DESIGN OF ENCLOSURES MUST MEET THESE MIN. SPEC'S. CONSUMER MAY SELECT THE USE OF TYPE A., B. OR C. ENCLOSURE.
2. INSULATION ON WALLS & COVER FOR TYPE A. & B. ENCLOSURE IS OPTIONAL. IF INSULATION IS USED, IT MUST BE AT LEAST 3 LB. WT. & 2" THICK.
3. ENCLOSURES MUST BE INSTALLED AND MAINTAINED SO THAT UNITS ARE SAFELY & READILY ACCESSIBLE FOR TESTING, MAINT. & REPAIRS.
4. FOR TYPE B. ENCLOSURE, THE HINGE MAY BE LOCATED AT OPTION A. OR B. AS SHOWN.
5. ALTERNATE DESIGNS MAY BE USED W/PRIOR WRITTEN APPROVAL FROM THE ADMINISTRATIVE AUTHORITY.

CONSTRUCTION NOTES:

A. APPROVED RPBA, DCVA, DCDA OR PVB.

B. DRAIN.

C. ADEQUATE CLEARANCES REQUIRED FOR TESTING, MAINT & REPAIR.

D. 5' MAX. FROM HANDWHEEL TO FINISH FLOOR, AS SHOWN. UNITS INSTALLED HIGHER THAN 5', CONSUMER MUST PROVIDE ACCESS PLATFORM/LADDER.

REVISIONS
12 / 90

CITY OF ALBUQUERQUE

WATER

ENCLOSURES

DWG. 2389

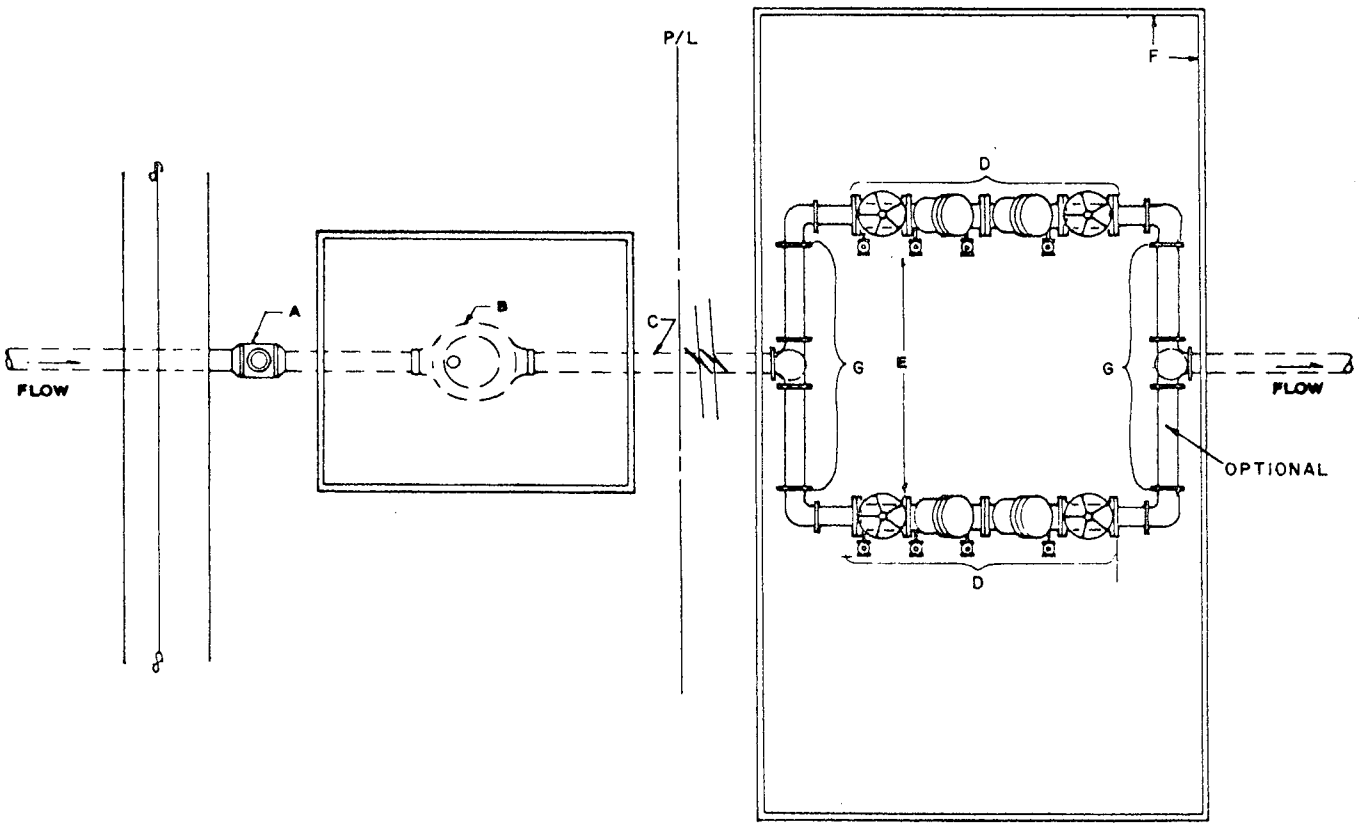

PLAN

GENERAL NOTES:

1. SEE DWG'S 2385, 2386, AND 2387.

CONSTRUCTION NOTES:

A. CURB STOP AND BOX.
B. METER.
C. SERVICE LINE, NO OUTLETS ALLOWED.
D. RPBA, DCVA OR DCDA.
E. ADEQUATE CLEARANCE REQ'D FOR TESTING & MAINT.
F. PROTECTIVE ENCLOSURE. SEE DWG. 2389 FOR DESIGN CRITERIA.
G. PIPING & FITTINGS MAY BE ABOVE OR BELOW GRADE.

REVISIONS	CITY OF ALBUQUERQUE
12/90	WATER INSTALLATION FOR CONTINUOUS SERVICE DWG. 2390

GENERAL NOTES:

1. SEE WATER DWG 2385.
2. USE THIS INTERIM DWG UNTIL THE CITY OF ALBUQUERQUE'S PARKS & RECREATION DEPARTMENT STD DWG IS AVAILABLE.

CONSTRUCTION NOTES:

A. METER.

B. MASTER VALVE(ELECTRIC OR MANUAL).

C. APPROVED RPBA.

D. CONTROL VALVE.

E. INJECTOR PUMP.

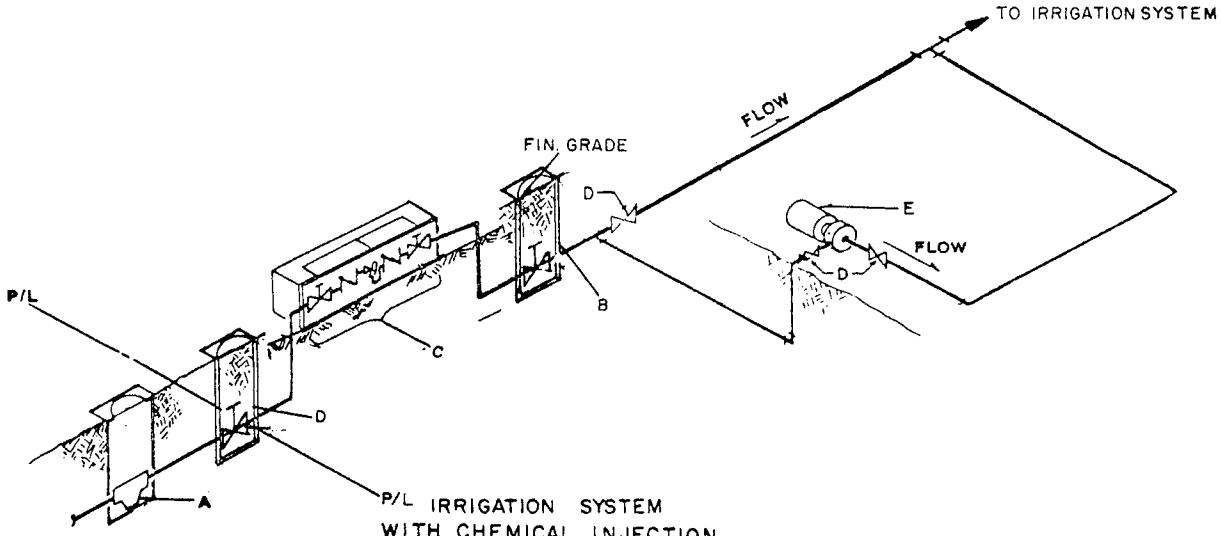

P/L IRRIGATION SYSTEM WITH CHEMICAL INJECTION

REVISIONS
12/90
10/91

CITY OF ALBUQUERQUE

LANDSCAPE

LANDSCAPE IRRIGATION SYSTEM

DWG. 2391

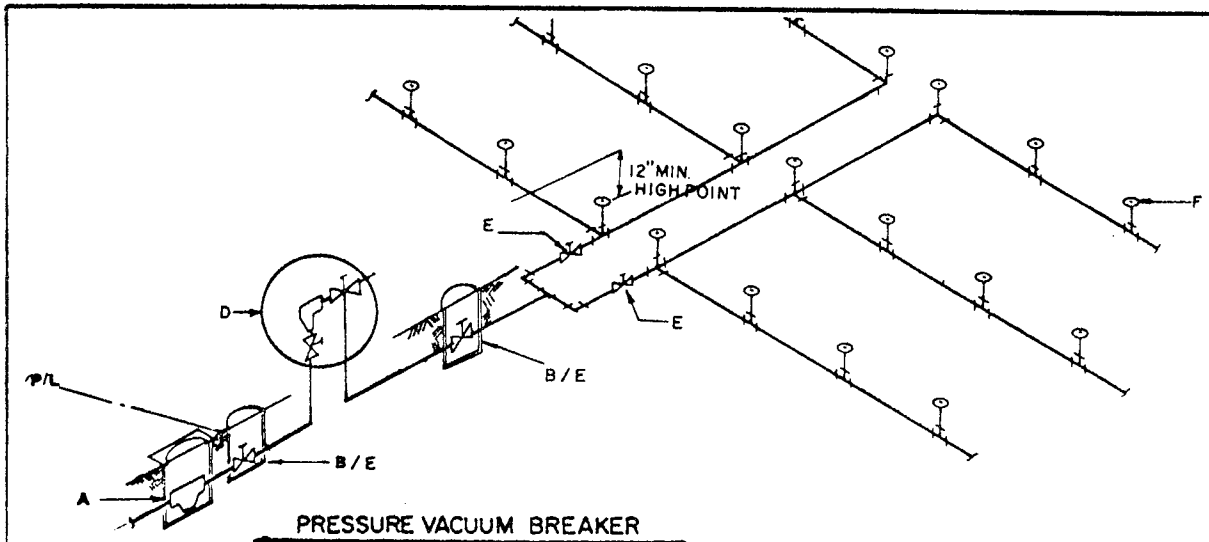

PRESSURE VACUUM BREAKER

EXAMPLE 1

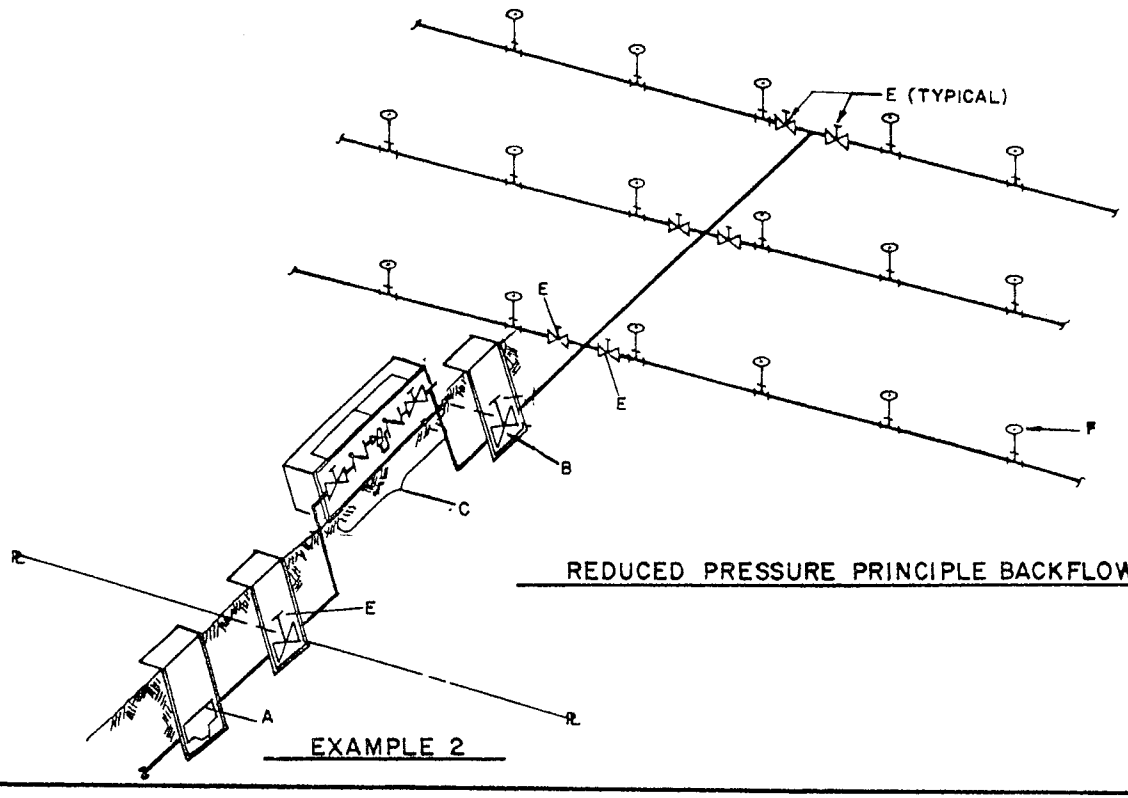

REDUCED PRESSURE PRINCIPLE BACKFLOW PREVENTION ASSEMBLY

EXAMPLE 2

GENERAL NOTES:

1. SEE WATER DWG 2385 & LANDSCAPE 2388A & 2388B.
2. USE THIS INTERIM DWG UNTIL THE CITY OF ALBUQUERQUE'S PARKS & RECREATION DEPARTMENT STD DWG IS AVAILABLE.

CONSTRUCTION NOTES:

A. METER.

B. MASTER VALVE(ELECTRIC OR MANUAL).

C. APPROVED RPBA.

D. APPROVED PVB.

E. CONTROL VALVES, OPTIONAL.

F. SPRINKLER.

REVISIONS	CITY OF ALBUQUERQUE
12/90 10/91	LANDSCAPE EXAMPLES OF LANDSCAPING IRRIGATION SYSTEMS. DRWG NO. 2392

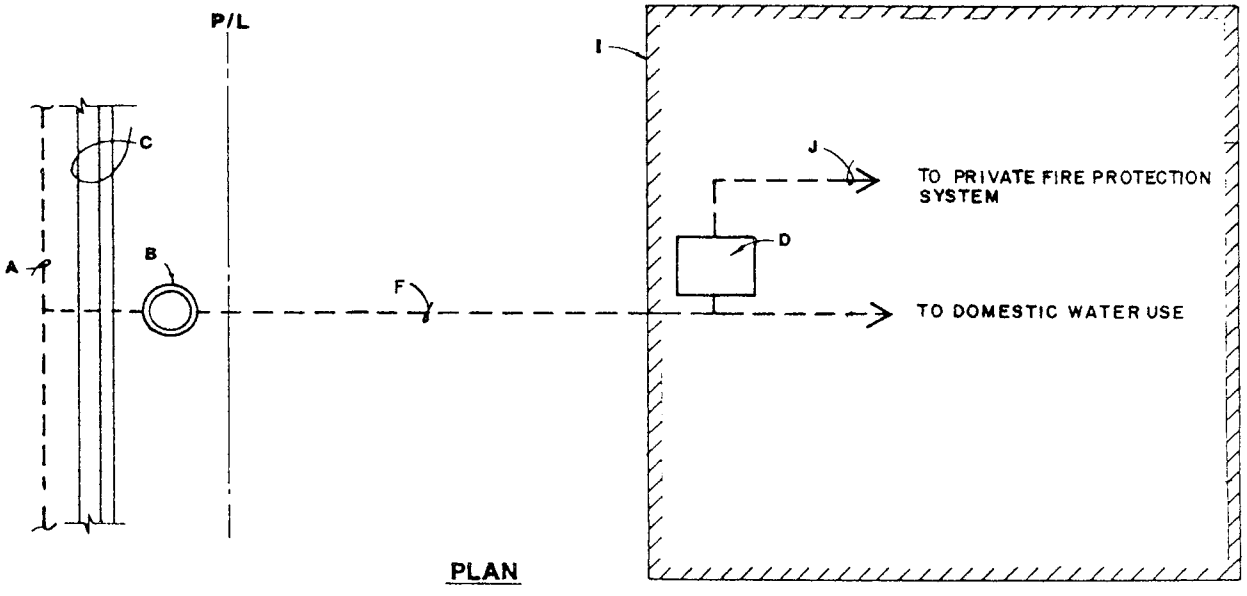

PLAN

CROSS-CONNECTION CONTROL BY CONTAINMENT
W/ MULTI - USE DOMESTIC & FIRE SERVICE LINE

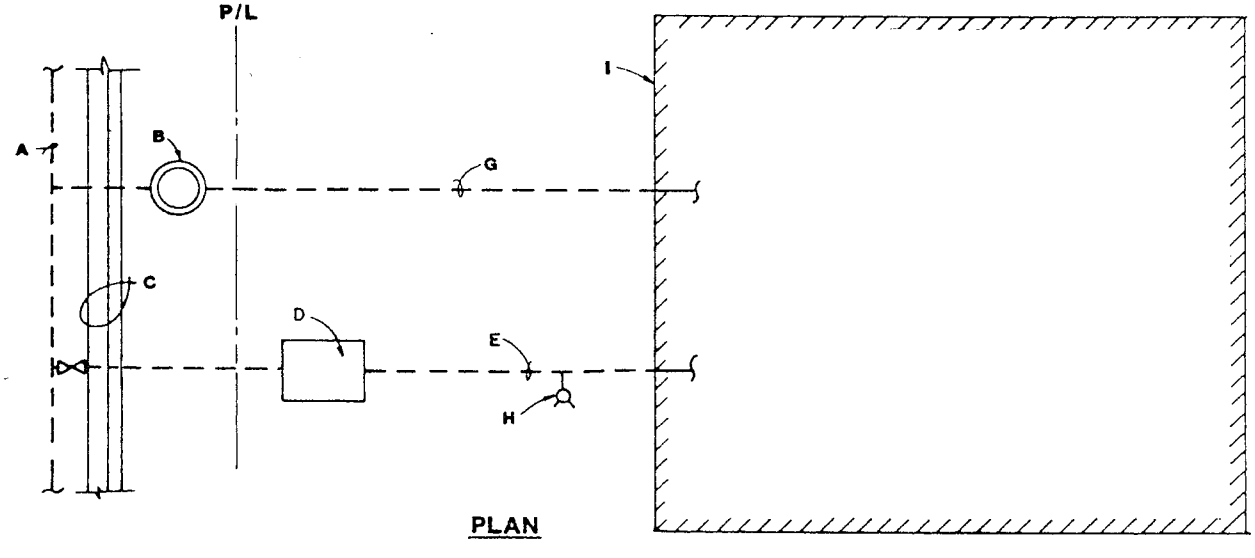

PLAN

CROSS-CONNECTION CONTROL BY CONTAINMENT
W/ UNMETERED FIRE SERVICE LINE

CONSTRUCTION NOTES:

A. WATER MAIN.
B: METER.
C. CURB AND GUTTER.
D. RPBA OR DCDA.
E. UNMETERED FIRE LINE.
F. SERVICE LINE FOR DOMESTIC & FIRE.
G. DOMESTIC SERVICE LINE.
H. PRIVATE FIRE HYDRANT.
I. BUILDING STRUCTURE.
J. INTERNAL FIRE PROTECTION SYSTEM.

REVISIONS	CITY OF ALBUQUERQUE
12/90	WATER PRIVATE FIRE PROTECTION SYSTEMS DWG. 2394

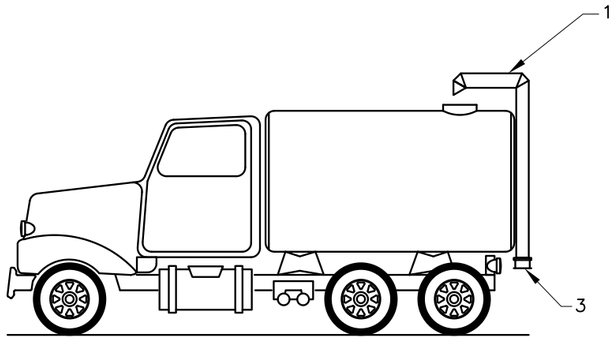

WATER TRUCK WITH AIR GAP

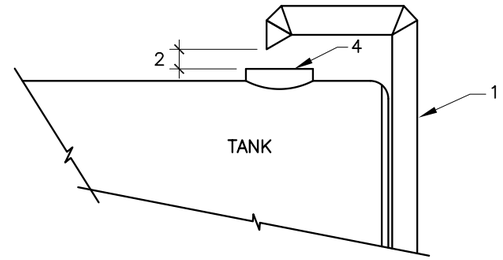

FILL PIPE DETAIL WITH AIR GAP

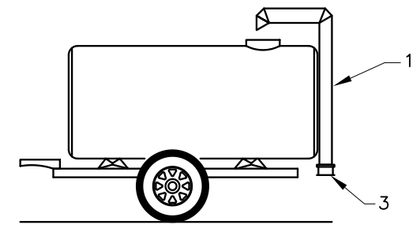

WATER WAGON WITH AIR GAP

KEYED NOTES:

1 FILL PIPE. PERMANENTLY MOUNTED ON TANK. SEE FILL PIPE DETAIL.

2 AIR GAP. AIR GAP IS TWICE THE DIAMETER OF FILL PIPE ABOVE FLOOD RIM.

3 HOSE CONNECTION.

4 FLOOD RIM.

5 FIRE HYDRANT METER.

6 APPROVED RPBA.

7 SUPPORTS REQUIRED.

RPBA = REDUCED PRESSURE BACKFLOW ASSEMBLY

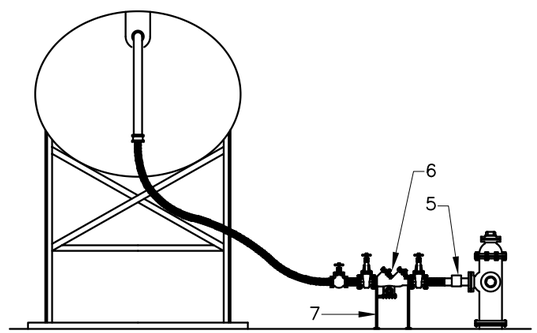

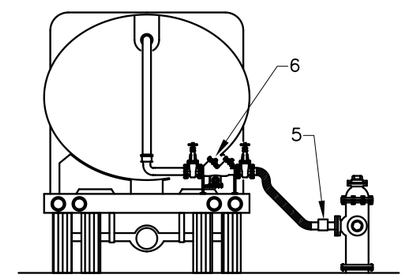

ELEVATED TANK WITH RPBA"S

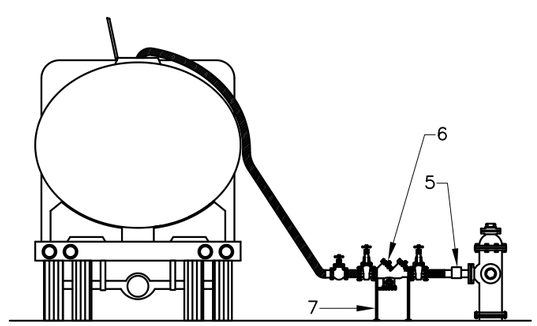

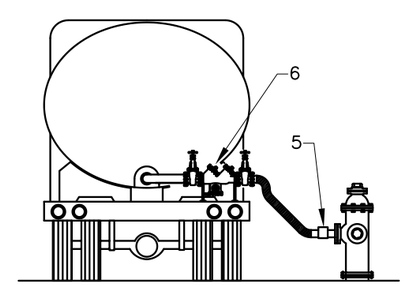

TANK TRUCKS WITH RPBA'S

REVISIONS	CITY OF ALBUQUERQUE
	WATER APPROVED METHODS OF FILLING TANKS DWG. 2395 JANUARY 2003