APPLICATION FOR SPECIAL EXCEPTION
CITY OF ALBUQUERQUE, PLANNING DEPARTMENT

Office of the Zoning Hearing Examiner
200 3rd Street, NW, Suite 735, 87102
505.924.3918

APPLICATION INFORMATION–PLEASE PRINT

CONTACT DATA: PROFESSIONAL / AGENT NAME (FIRST, LAST): CHARLES JAEGER
MAILING ADDRESS: 2530 VERANDA NW.
CITY: ALBUQUERQUE STATE: NM ZIP CODE: 87107
Email: CAJaeger@swcp.com

TELEPHONE (INCLUDE AREA CODE)
(H) 505 - 345 - 6270
(W) - -
(C) 505 - 550 - 6270

APPLICANT DATA: OWNER NAME (FIRST, LAST–IF ANY): ANN GATELEY
MAILING ADDRESS: 519 11th ST. NM
CITY: Albuquerque NM STATE: ZIP CODE: 87104
Email:

(H) 505 - 242 - 9724 ✓
(W) - -
(C) 505 - 269 - 3983

LEGAL DESCRIPTION OF PROPOSED SPECIAL EXCEPTION–PLEASE PRINT

STREET ADDRESS OF SPECIAL EXCEPTION: 519 11th ST NW ZIP CODE: 87104
LOT(S): 9&10 TRACT(S): BLOCK(s): 8
SUBDIVISION / ADDITION / MRGCD MAP NO: PEREA ADD
UNIFORM PROPERTY CODE: 101905 846112 442706

CRITERIA FOR DECISION– I have been given the Criteria for Decision requirements. Initial Here

EXPLANATION OF REQUEST– On additional sheet(s) of paper, please state why you want this Special Exception, based on the Criteria for Decision Requirements.

DRAWINGS OF REQUEST– **ATTACH THREE (3) COPIES.** Please follow instructions on the back of this form and attach the appropriate drawings.

ACKNOWLEDGEMENT– I hereby acknowledge that, to the best of my knowledge, this application is correct and complete and that I have received one or more signs that I have agreed to post and maintain as provided and where instructed. I understand that failure to properly post sign(s) is grounds for deferral of my case

SIGNATURE: CA Jaeger DATE: 6/12/11

ZONING ENFORCEMENT OFFICE INTERNAL USE ONLY

PROJECT #: 1008809 **APPLICATION #:** 11 ZHE 80117

APPLICATION FOR: (CHECK AS APPROPRIATE)
- ☒ **(ZHE01)** Conditional Use
- ☐ **(ZHE02)** Expansion of a NonConforming Use
- ☐ **(ZHE03)** NonConforming Use / Status Established Building
- ☐ **(ZHE04)** Variance: ☐ Distance ☐ Setback ☐ Height ☐ Parking ☐ Size ☐ Other

SECTION NO. Page 15 SF REFERENCE SECTION NO: 14-16-2-6 (B)(1)

(LEGAL AD) ACTION DESCRIPTION ~~14-16-2-6 (B)~~ A conditional use for a proposed accessory living quarters

SECTOR DEVELOPMENT AREA: Downtown Neiberhoods

ZONED: SU-2 SF ZONE MAP PAGE: J - 13 NO. OF SIGNS ISSUED: 1

For more current information and more details visit: http://www.cabq.gov/gis

AGIS
Albuquerque Geographic Information System

Map amended through: 2/4/2010

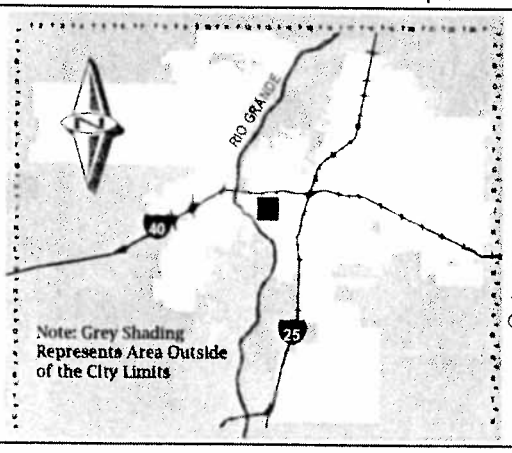

Zone Atlas Page:

J-13-Z

Selected Symbols

- SECTOR PLANS
- Design Overlay Zones
- City Historic Zones
- H-1 Buffer Zone
- Petroglyph Mon.
- Escarpment
- 2 Mile Airport Zone
- Airport Noise Contours
- Wall Overlay Zone

0 750 1,500 Feet

(4) Growing plants, noncommercial.

(5) Private Commons Development, not less than two acres in area, if allowed in a Sector Development Plan or area plan governing the site.

(6) Public park.

(7) Public school, including caretaker's mobile home.

(8) Public utility structure, provided its location is in accord with an adopted facility plan and a site development plan for building permit purposes has been approved by the Planning Commission.

(9) Real estate office and an incidental sign in connection with a specific development, provided it is not used as living quarters during the time it is used as an office, and further provided that it is limited to a period of one year unless the time is extended through approval by the Zoning Enforcement Officer. A site plan and floor plan approved by the Zoning Enforcement Officer is required prior to establishment of this activity.

(10) Wireless Telecommunications Facility which is concealed or located on a public utility structure, provided the requirements of § 14-16-3-17 of this Zoning Code are met.

(11) Family Housing Development, as defined by the Family Housing Development Ordinance, Section 4.

(B) Conditional Uses.

(1) Accessory living quarters.

(2) Animal keeping, noncommercial, the species being other than those which are permissive in this section.

(3) Carport in the required front or side setback area, provided:

a. No part is within three feet of a property line, other than a right-of-way line.

b. No building wall is ever built within a required setback area.

c. The specific carport proposed is in harmony with the building site.

(4) Construction office in connection with a specific construction project provided it is limited to a period of one year unless the time is extended through a new conditional use.

(5) Family day care home, with any sign limited as for home occupations. There shall be an outdoor play area adequately enclosed with a wall or fence. At least one member of the residing family shall serve as a provider of care. The activity shall be licensed by the state as a family day care home. (See also the permissive use provisions.)

(6) Front yard setback of not less than fifteen feet if there is no front yard driveway and vehicle access is only to the rear yard from an alley or if the garage setback is not less than 25 feet and compromises no more than 50% of the width of the street-facing building façade and driveways and off-street parking areas cover no more than 60% of the area of the front yard.

AREA PLAN

A. Land Use

With the adoption of this sector development plan, the Downtown Neighborhood Area is zoned SU-2 Special Neighborhood Zone, Redeveloping Area, as provided in the Comprehensive City Zoning Code, Article XIV Chapter 7 of the Revised Ordinances of Albuquerque, New Mexico, 1974. The land uses in the Downtown Neighborhood Area are governed by the land use plan shown on Map 7.

The Single Family land use shown on the land use plan corresponds to the R-1 Residential Zone in the Comprehensive City Zoning Code and is subject to the same regulations as that zone with three exceptions:

(1) The minimum lot width is 50 feet instead of the Code requirement of 60 feet.

(2) The minimum front yard setback is 10 feet instead of the Code requirement of 20 feet, except that the minimum front yard setback for a garage or carport is 20 feet.

(3) The area shown on the land use plan as Single Family which is north of Lomas Boulevard and west of 15th Street also is subject to the provisions of the W Wall Overlay Zone in the Zoning Code. The maximum front yard height allowed is eight feet.

The Townhouse land use corresponds to the R-T Residential Zone in the Comprehensive City Zoning Code and is subject to the same regulations as that zone with four exceptions:

(1) The minimum lot area is 2,000 square feet instead of the Code requirement of 3,000 square feet.

(2) The minimum front yard setback is 10 feet instead of the Code requirement of 15 feet, except that the minimum front yard setback for a garage or carport is 20 feet.

(3) The off-street parking requirement is one and one-fourth spaces per dwelling unit instead of the Code requirement of one space per bath but not less than two spaces per unit.

(4) The usable open space requirement is 500 square feet per dwelling unit instead of the Code requirement of 750 square feet per unit.

The Low Density Apartment land use corresponds to the R-2 Residential Zone in the Comprehensive City Zoning Code and is subject to the same regulations as that zone with three exceptions:

(1) The minimum front yard setback is 10 feet instead of the Code requirement of 15 feet, except that the minimum front yard setback for a garage or carport is 20 feet.

(2) The off-street parking requirement is one and one-fourth spaces per dwelling unit instead of the Code requirement of one space per bath but not less than one and one-half spaces per unit.

HISTORIC ZONES

Rec	NAME
1	FOURTH WARD

OWNERSHIP

Rec	UPC CODE	OWNER	OWNER ADDRESS	OWNER CITY	OWNER STATE	OWNER ZIPCODE	PROPERTY CLASS	TAX DISTRICT	LEGAI
1	101305846112442706	GATELEY ANN	519 11TH ST NW	ALBUQUERQUE	NM	87102	R	A1AM	* 009 008PEREA /

ZONING

Rec	ZONING	DESCRIPTION
1	SU-2	SF

ZONE GRID

Rec	ZONE ATLAS GRID
1	J13

PARCELS

Rec	NUMBER	NAME	DESIGNATION	QUADRANT	LOT	BLOCK	SUBDIVISION	PIN
1	519	11TH	ST	NW	10	8	PEREA ADDN	ABQ127097

2008 AIR PHOTO

No Features found.

2008 AIR PHOTO

No Features found.

NEIGHBORHOODS

Rec	COASDE.AGIS.NEIGHBORHOODASSOCIATIONS.ASSOCIATIONNAME	COASDE.AGIS.NEIGHBORHOODASSOCIATIONS.ASSOCIATIO
1	DOWNTOWN	R

SECTOR PLANS

Rec	SECTOR PLAN NAME
1	DOWNTOWN NEIGHBORHOODS

COUNCIL

Rec	COUNCILOR NAME	COUNCIL DISTRICT
1	Debbie O'Malley	2

ZIPCODES

Rec	ZIPCODE
1	87102

2008 AIR PHOTO

No Features found.

City of Albuquerque
Zoning Enforcement Division
Albuquerque, NM 87102

May 10, 2011

Re: Special Exception Criteria for Approval - Conditional Use

Ann Gateley wishes to expand and rebuild her old, collapsing garage into a studio on her existing property at 519 11th Street NW. The garage will be remodeled to be a studio of approximately 380 sq.ft. with a new roof, and will be on the existing property lines with no or little set back. This remodeled studio will be on the southwest corner of the property.

Ann Gateley has contacted her neighbors on the south end of the property and has their approval. She has also contacted the neighbor on the west end of the property and is awaiting their response.

This remodeled garage studio will not be injurious to the adjacent property, the neighborhood, or the community. Nor will it be significantly damaged by surrounding structures or activities.

Sincerely,

Charles Jaeger, contractor, for Ann Gateley

EXHIBIT A

PLAT OF SURVEY
Lots 9 & 10, Block 8, PEREA ADDITION
BERNALILLO COUNTY, NEW MEXICO
PAGE 1 OF 2

THIS IS TO CERTIFY TO FIRST AMERICAN TITLE COMPANY, THAT ON April 20, 1990, I MADE AN INSPECTION AND PROPERTY CORNER SURVEY OF THE PREMISES SITUATED IN ALBUQUERQUE, BERNALILLO COUNTY, NEW MEXICO.

LEGAL DESCRIPTION:

Lots numbered Nine (9) and Ten (10) in Block numbered Eight (8) of the PEREA ADDITION to the City of Albuquerque, New Mexico, as the same are shown and designated on the map of said Addition, filed in the office of the Probate Clerk and Ex-officio Recorder of Bernalillo County, New Mexico, on May 1, 1891.

SKETCH

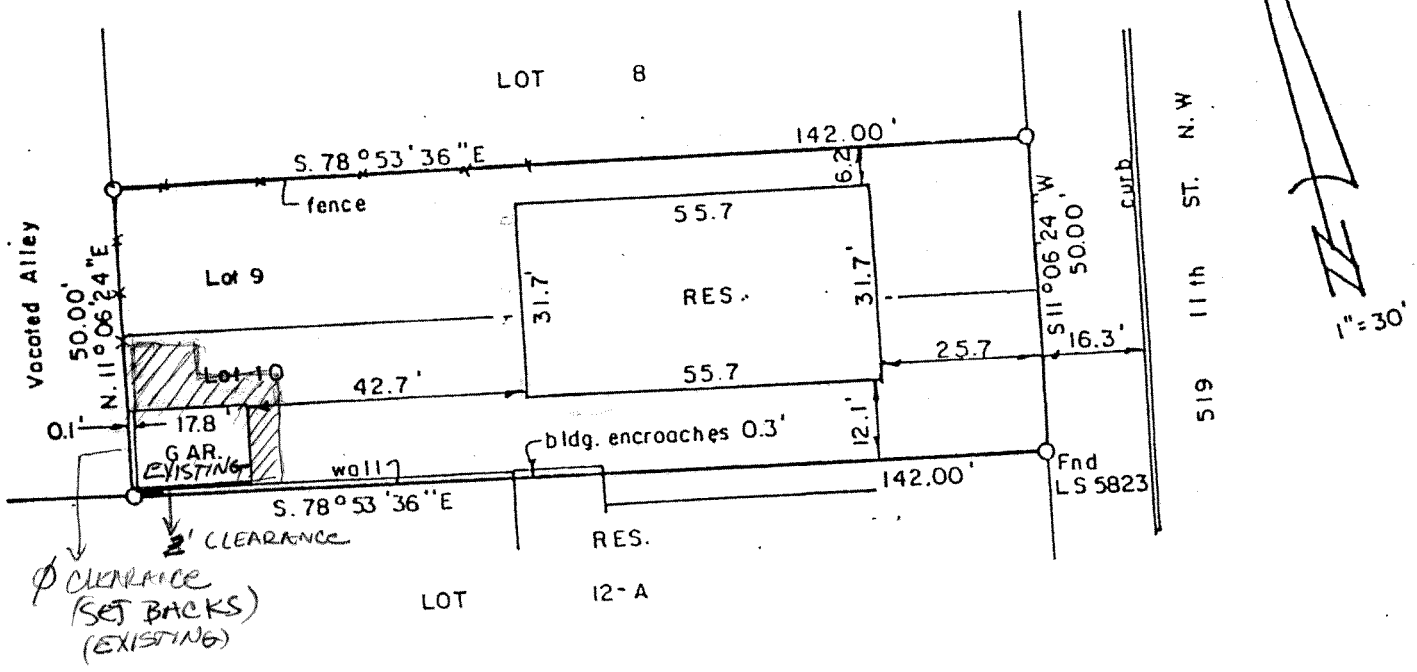

Ann Gateley's Studio 519 11th street Albuquerque, NM

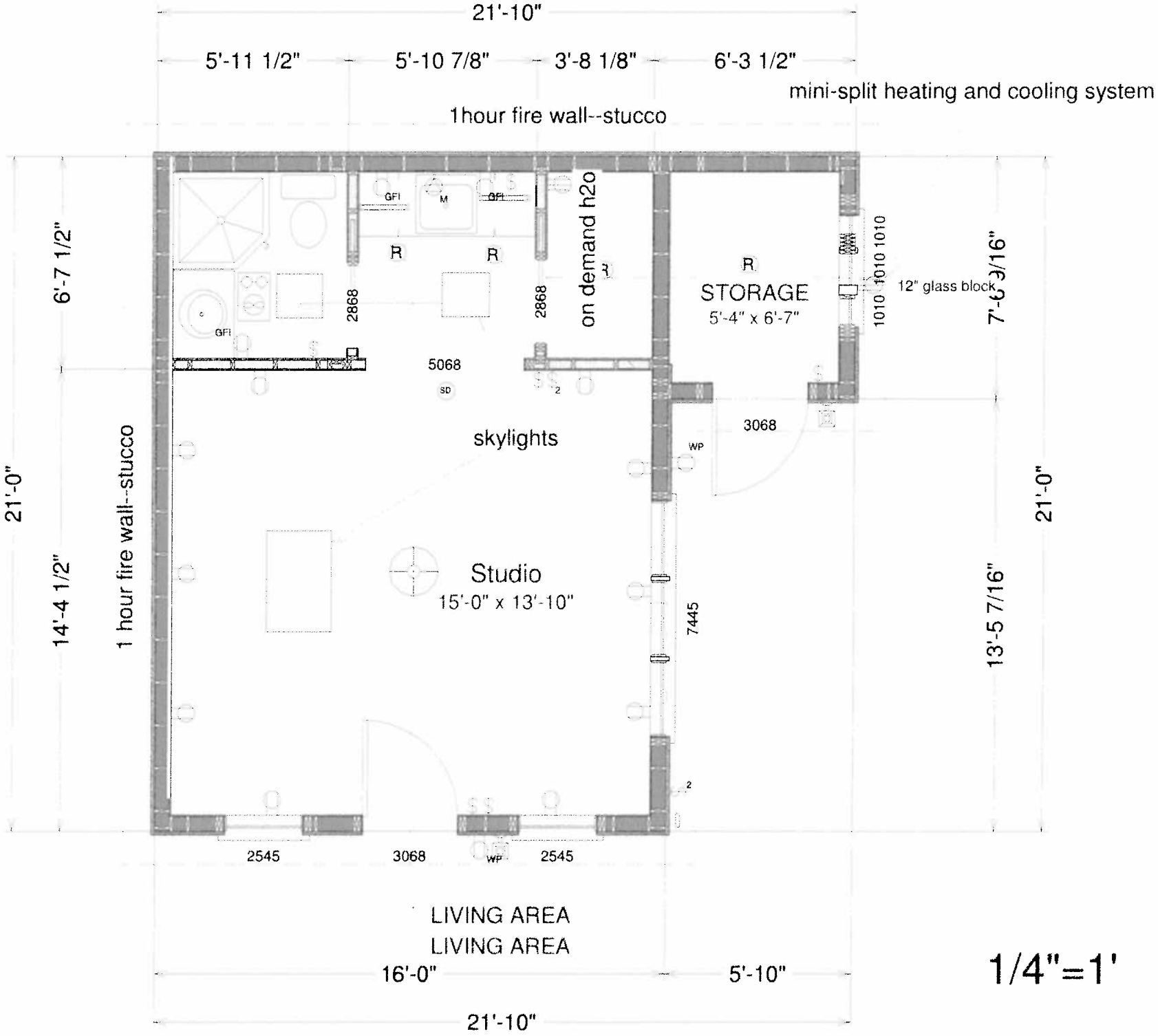

1/4"=1'

Ann Gateley's Studio 519 11th street Albuquerque, NM

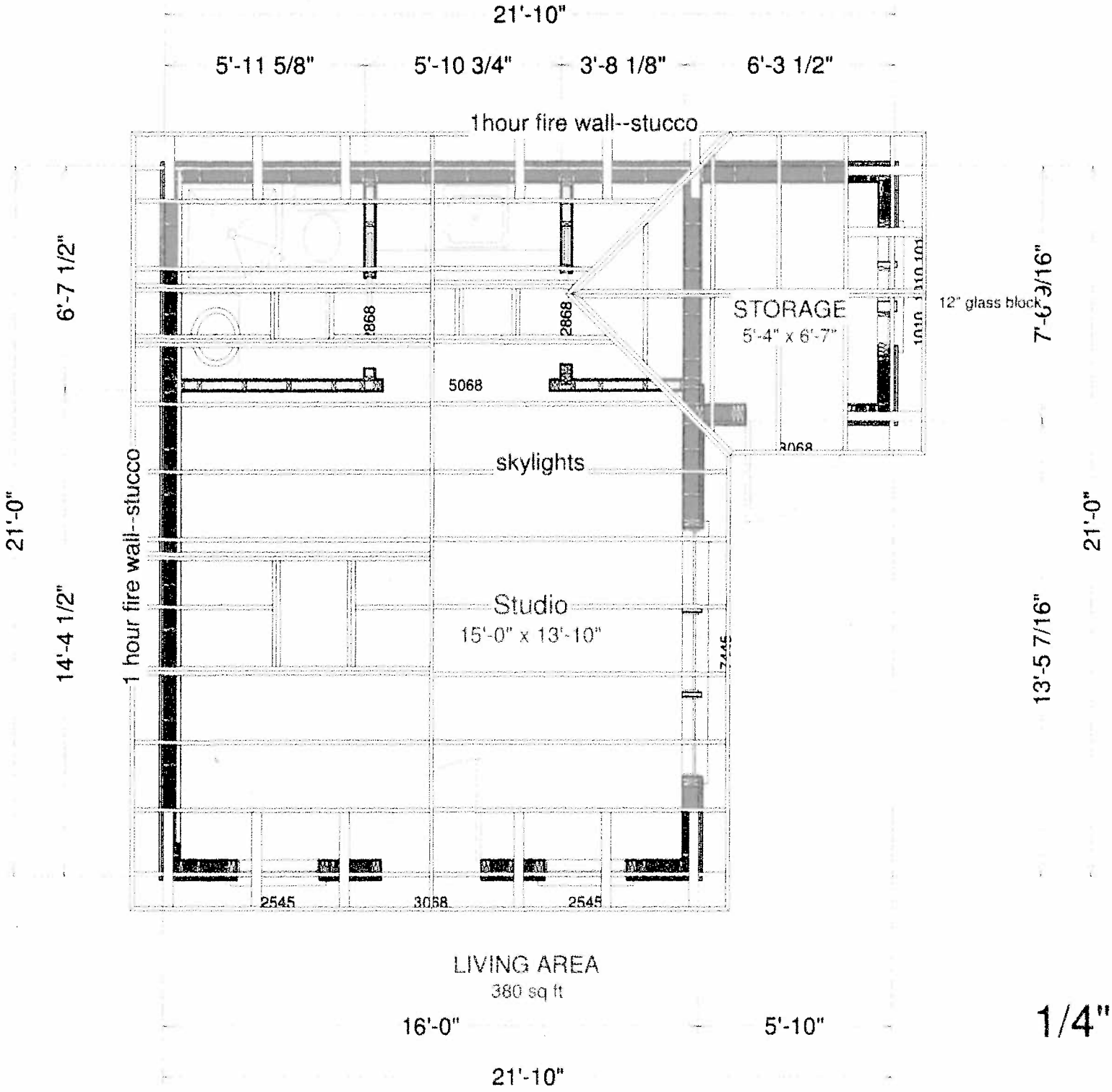

ROOF PLAN WITH 2X8 RAFTERS 24"OC

1/4"=1'

Ann Gateley's Studio 519 11th street Albuquerque, NM

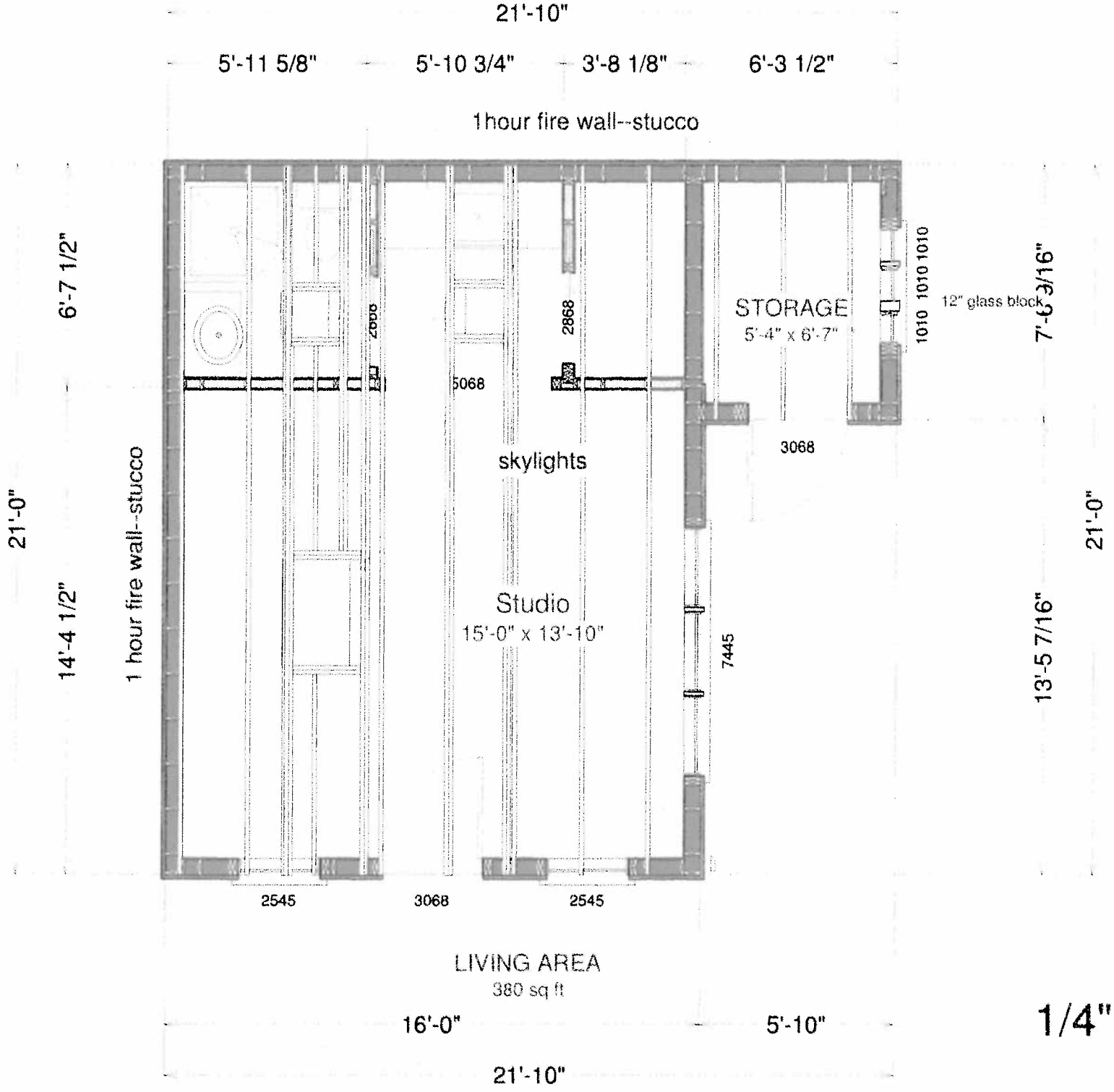

CEILING PLAN WITH 2X8 JOISTS 24"OC

1/4"=1'

Ann Gateley's Studio 519 11th St.

Foundation Plan
Wall Plan
Roof plan

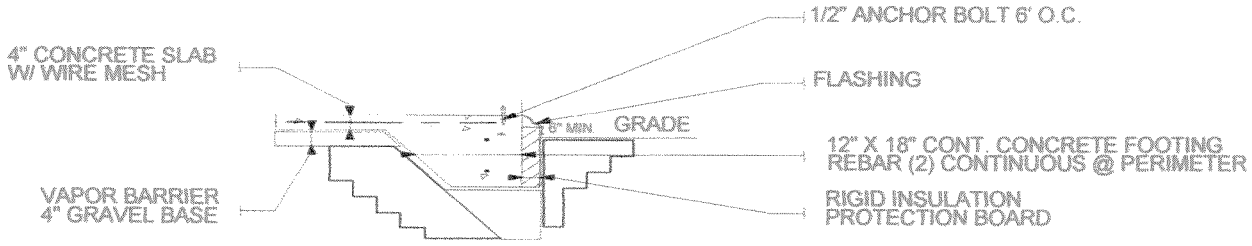

MONOLITHIC SLAB ON GRADE - INSULATED

FDMSI

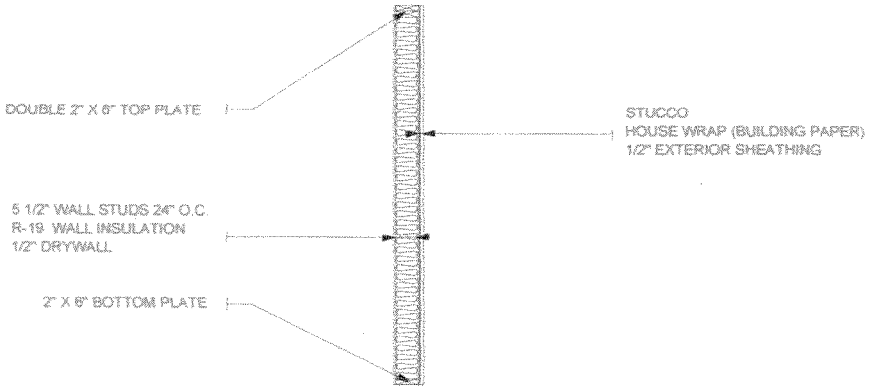

WOOD WALL SYSTEM - 2" X 6" X 92 5/8" STUDS W/ STUCCO

WEX ST 06 92.63 .5

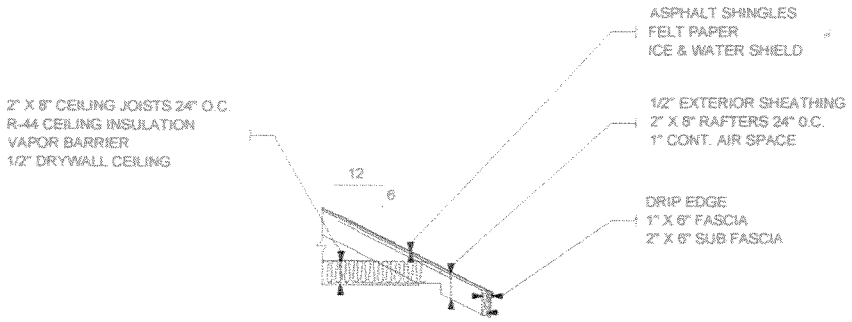

ROOF SYSTEMS - 2" X 8" RAFTER, 6/12 PITCH, 12" OVERHANG

RHF 06 08P 12

EAST ELEVATION

wooden shigles
yellow as the house

21'-2 15/16"

12'-8 5/8"

yellow wooden shigles
windows-single bottom
panes
same as house

NORTH ELEVATION

WEST ELEVATION

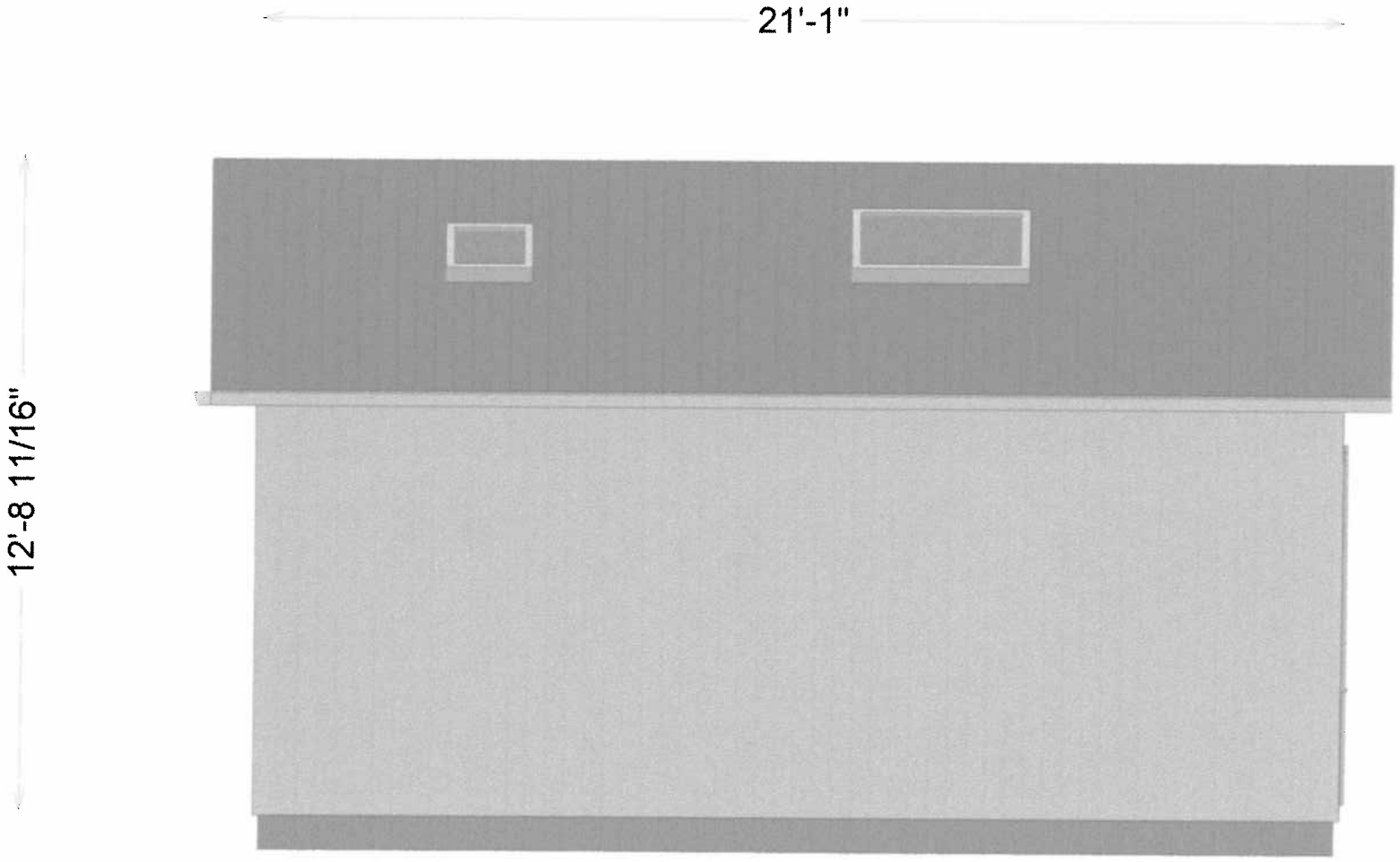

south elevation